Job Name: 25-4288 - Project Wave Job Location: Franklin, KY 42134 Contractor: Cumberland Pipeline LLC	Plant: 100 8/28/2026 10:27:39 AM	Tech: PC: Erica Bradley

Structure ID: A14

P5 GR4X **XYPEX GRADE RING F/F**

P6) 24" - CASTING HEIGHT - 7"	0 lb
P5) 24" - XYPEX GRADE RING F/F - 4"	270 lb
P4) 48" - ECC XYPEX CONE w/ 24" HOLE F/G - 42"	3116 lb
P3) 48" - MH RISER w/XYPEX T/G - 60"	4192 lb
P2) 48" - MH RISER w/XYPEX T/G - 60"	4192 lb
P1) 48" - MH BASE w/XYPEX T/n - 30"	3309 lb
1) JOINT WRAP - 0.065"x6"x50' CONSEAL CS212	0 lb
1) JOINT WRAP PRIMER - CONSEAL CS-75 (1 gal.)	0 lb
1) 48" - MH INVERT CHANNEL w/XYPEX - FULL HEIGHT	1440 lb
1) CASTING - JBS 1150 F/C SANITARY	250 lb
3) 48" - Conseal CS-102 1.00" (Double)	0 lb
2) 24" - Conseal CS-102 1.00" (Double)	0 lb
2) PSX - 12-08 NYLO	16 lb
1) PSX - 8QRS-S NYLO	6 lb
16) MH Step ML-10-TDS-NCR - 10"	0 lb
Structure Total:	16791 lb

Structure Notes: 1. PER ASTM C-478 SPECIFICATIONS
2. CONCRETE: 4,000 PSI AT 28 DAYS
3. REINFORCEMENT: PER ASTM A615
4. INVERT CHANNEL REQUIRED
5. STEPS AT 0 DEGREES
6. JBS 1150 FRAME & COVER "SANITARY" SUPPLIED BY ICAST

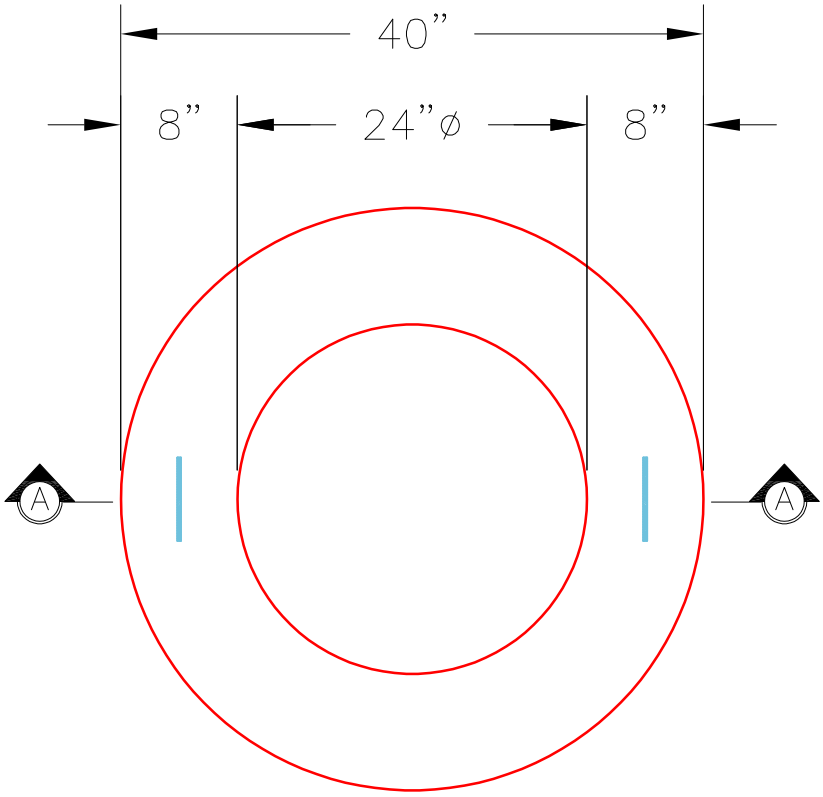

PLAN VIEW

NOTES:

1. GRADE RINGS MEET OR EXCEED THE FOLLOWING SPECIFICATIONS
   –CONCRETE: 4,000 PSI @ 28 DAYS
   –REINFORCING: (1) #3 HOOP CENTERED (GRADE 60)
2. WEIGHT: 4" 270 LBS.
3. XYPEX ADMIXTURE

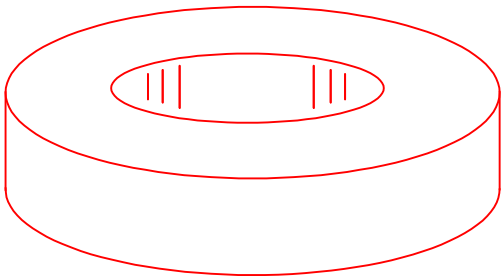

ISOMETRIC VIEW

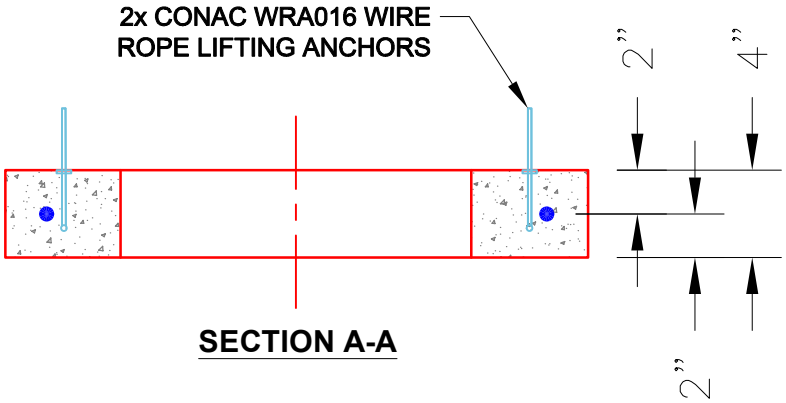

SECTION A-A

Coating (Int): Coating (Ext):	Seam Up: Flat Seam Dn: Flat	Wall Thickness: 8"	Height (Ext): 4"	Weight (Net): 270 lb Volume (Net): 0.07cu.yd