Job Name: 25-4245 - KYTC Marion Co Call 104 (251015) Job Location: Lebanon, KY Contractor: Rame Contracting LLC	Plant: 100 12/29/2025 11:54:05 AM	Tech: J. Horsley - A PC: Celina Goff	

Structure ID: 17

P1 BX2436-08BVF BOX BASE 8inW, 8inF, Variable Ht T/n

P3) 24" x 120" - CB INLET KY A 10' TOP LEFT F/G - 10"	3400 lb
P2) 24" x 120" - CB INLET KY A 10' BOTTOM LEFT T/G - 18"	5270 lb
P1) 24" x 36" - BOX BASE 8inW, 8inF, Variable Ht T/n - 31"	4011 lb
1) CASTING - HOE KY-206 F/C (KY TY1)	206 lb
1) 24" x 36" - Conseal CS-102 1.00"	0 lb
2) Hole - 22	0 lb
2) Hole - 6	0 lb
Structure Total:	12887 lb

Structure Notes:

** KYTC STATE PROJECT **

1. HOE KY-206 FRAME & COVER (KY TY 1) PROVIDED BY ICAST - FRAME TO BE CAST INTO TOP PHASE TOP FLANGE SIDE UP
2. PER KYTC CBI TYPE A / ASTM C-913 SPECS
3. CONCRETE: 4,000 PSI AT 28 DAYS
4. REINFORCEMENT: #5 BAR @ 12" C.C. E.W. (GRADE 60) - 2" MIN. REBAR CLEARANCE (TYP)
5. NO INVERT CHANNEL

Rim: 841.23' Rim to Invert: 5.09' Slack: 2.08" Sump: 0" Step Position:

Position	Elev	Angle	Ext. (cw)	Pipe	Pipe OD	Connector	Hole	Horz Size	Up (_)	Offset
Invert 1	836.14'	0°	20"	18" CMP	19"	Hole 22	22"	22"	-2"	0"
Invert 2	836.14'	180°	20"	18" CMP	19"	Hole 22	22"	22"	-2"	0"
Invert 3	836.64'	90°	26"	4" HDPE (perf pipe)	4.8"	Hole 6	6"	6"	5"	0"
Invert 4	836.64'	270°	26"	4" HDPE (perf pipe)	4.8"	Hole 6	6"	6"	5"	0"
Invert 5										
Invert 6										
Invert 7										
Invert 8										

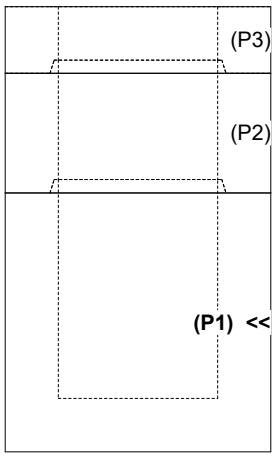

RIGHT-SIDE UP VIEW (int. dimensions)

UPSIDE-DOWN VIEW (int. dimenions)

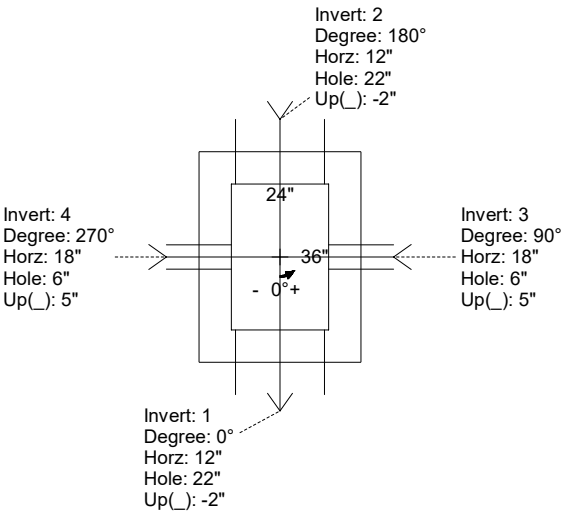

INSIDE WALL DIMENSIONS

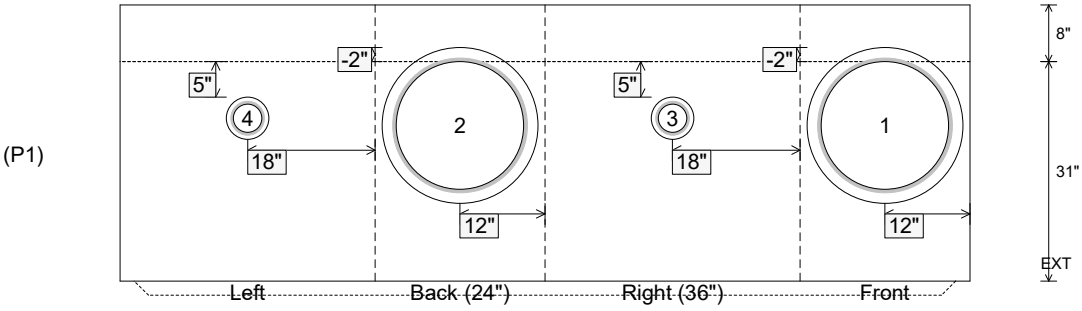

Coating (Int): Coating (Ext):	Seam Up: Tongue Seam Dn: n/a	Wall Thickness: 8" Floor Height: 8"	Height (Int): 31" Height (Ext): 39"	Weight (Net): 4011 lb Volume (Net): 1.02cu.yd