Job Name: 25-3579 - Lebanon Rd Clarks Run Trunk Sewer Ph 2 Job Location: Danville, KY Contractor: Hubert Excavating & Contracting	Plant: 100 8/21/2026 12:57:33 PM	Tech: J. Horsley PC: C. Goff	

Structure ID: MH C1

P1 MH048BAEVF **MH BASE w/FLANGE (08F/08EF) w/Coating T/n**

P3)	24" - CASTING HEIGHT - 7"	0 lb
P2)	48" - ECC CONE w/ 24" HOLE, w/Coating F/G - 36"	2251 lb
P1)	48" - MH BASE w/FLANGE (08F/08EF) w/Coating T/n - 24"	4420 lb
1)	48" - MH INVERT CHANNEL - FULL HEIGHT	1440 lb
1)	JOINT WRAP - 12" WD x 048" MAC WRAP	0 lb
1)	SPECIAL EXTERNAL COATING	0 lb
1)	48" - Conseal CS-102 1.00"	0 lb
3)	PSX - 12-08 NYLO	24 lb
5)	MH Step ML-10-TDS-NCR - 10"	0 lb
81.37 SqFt)	Carboline Bitumastic 300M [EXT]	0 lb
	Structure Total:	8135 lb

Structure Notes: 1. PER ASTM C478 SPECIFICATIONS.
2. CONCRETE = 4,000 PSI AT 28 DAYS.
3. CASTING BY OTHERS (HOE WT-375 SAN. F/C).
4. ALL PIECES TO HAVE EXTERIOR COATING (CARBOLINE BITUMASTIC 300M).
REINFORCING PER ASTM A615 (GRADE 60).
- CONE (As .12)
- RISER/WALLS (As .12)
- FLOOR (As .31) #5 BARS AT 12" C.C.E.W.

Rim: 899.86' Rim to Invert: 5.43' Slack: 0.16" Sump: 2" Step Position: 180°

Position	Elev	Angle	Ext. (cw)	Pipe	Pipe OD	Connector	Hole	Horz Size	Up (_)	Offset
Invert 1	894.43'	0°	0"	8" PVC SDR35	8.5"	PSX 12-08 NYLO	12"	12.129"	0"	0"
Invert 2	894.53'	90°	45.553"	8" PVC SDR35	8.5"	PSX 12-08 NYLO	12"	12.129"	1.2"	0"
Invert 3	894.53'	270°	136.659"	8" PVC SDR35	8.5"	PSX 12-08 NYLO	12"	12.129"	1.2"	0"
Invert 4										
Invert 5										
Invert 6										
Invert 7										
Invert 8										

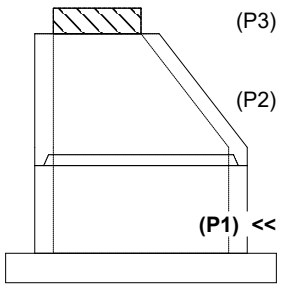

RIGHT-SIDE UP VIEW (int. dimensions)

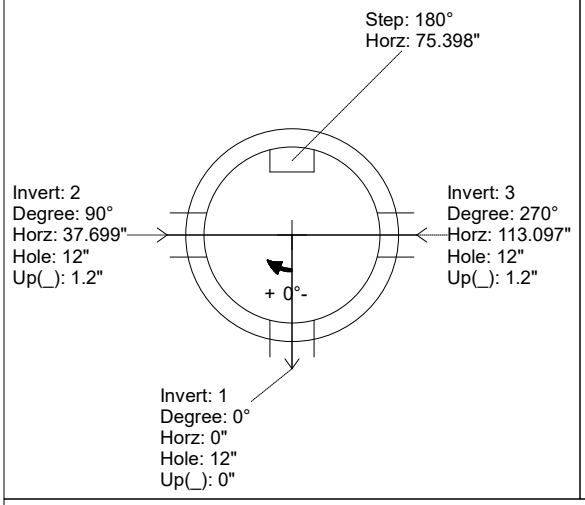

UPSIDE-DOWN VIEW (int. dimenions)

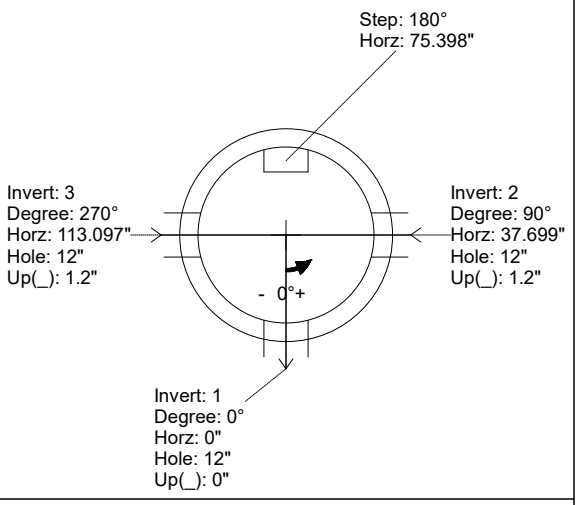

INSIDE WALL DIMENSIONS

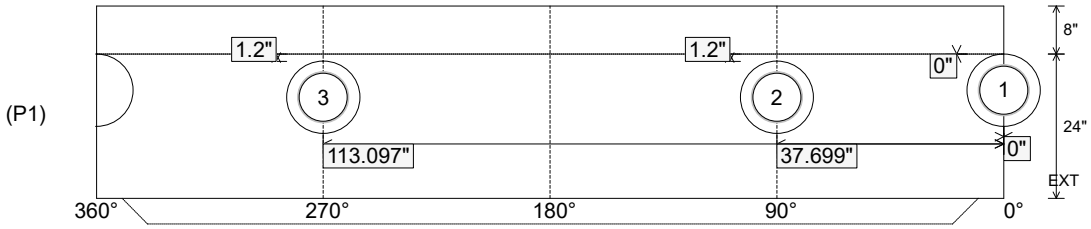

Coating (Int): Coating (Ext): Carboline Bitumastic 300M	Seam Up: Tongue Seam Dn: n/a	Wall Thickness: 5" Floor Height: 8"	Height (Int): 24" Height (Ext): 32"	Weight (Net): 4420 lb Volume (Net): 1.13cu.yd

Job Name: 25-3579 - Lebanon Rd Clarks Run Trunk Sewer Ph 2 Job Location: Danville, KY Contractor: Hubert Excavating & Contracting	Plant: 100 8/21/2026 12:57:33 PM	Tech: J. Horsley PC: C. Goff	

Structure ID: MH C1

P1 MH048BAEVF **MH BASE w/FLANGE (08F/08EF) w/Coating T/n**

P3)	24" - CASTING HEIGHT - 7"	0 lb
P2)	48" - ECC CONE w/ 24" HOLE, w/Coating F/G - 36"	2251 lb
P1)	48" - MH BASE w/FLANGE (08F/08EF) w/Coating T/n - 24"	4420 lb
1)	48" - MH INVERT CHANNEL - FULL HEIGHT	1440 lb
1)	JOINT WRAP - 12" WD x 048" MAC WRAP	0 lb
1)	SPECIAL EXTERNAL COATING	0 lb
1)	48" - Conseal CS-102 1.00"	0 lb
3)	PSX - 12-08 NYLO	24 lb
5)	MH Step ML-10-TDS-NCR - 10"	0 lb
81.37 SqFt)	Carboline Bitumastic 300M [EXT]	0 lb
	Structure Total:	8135 lb

Structure Notes: 1. PER ASTM C478 SPECIFICATIONS.
2. CONCRETE = 4,000 PSI AT 28 DAYS.
3. CASTING BY OTHERS (HOE WT-375 SAN. F/C).
4. ALL PIECES TO HAVE EXTERIOR COATING (CARBOLINE BITUMASTIC 300M).
REINFORCING PER ASTM A615 (GRADE 60).
- CONE (As .12)
- RISER/WALLS (As .12)
- FLOOR (As .31) #5 BARS AT 12" C.C.E.W.

Invert channel drawing
Full height invert

Rim: 899.86' Rim to Invert: 5.43' Slack: 0.16" Sump: 2" Step Position: 180°

Position	Elev	Angle	Ext. (cw)	Pipe	Pipe OD	Connector	Hole	Horz Size	Up (_)	Offset
Invert 1	894.43'	0°	0"	8" PVC SDR35	8.5"	PSX 12-08 NYLO	12"	12.129"	0"	0"
Invert 2	894.53'	90°	45.553"	8" PVC SDR35	8.5"	PSX 12-08 NYLO	12"	12.129"	1.2"	0"
Invert 3	894.53'	270°	136.659"	8" PVC SDR35	8.5"	PSX 12-08 NYLO	12"	12.129"	1.2"	0"
Invert 4										
Invert 5										
Invert 6										
Invert 7										
Invert 8										

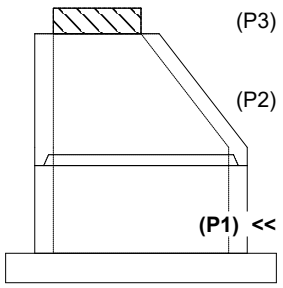

RIGHT-SIDE UP VIEW (int. dimensions)

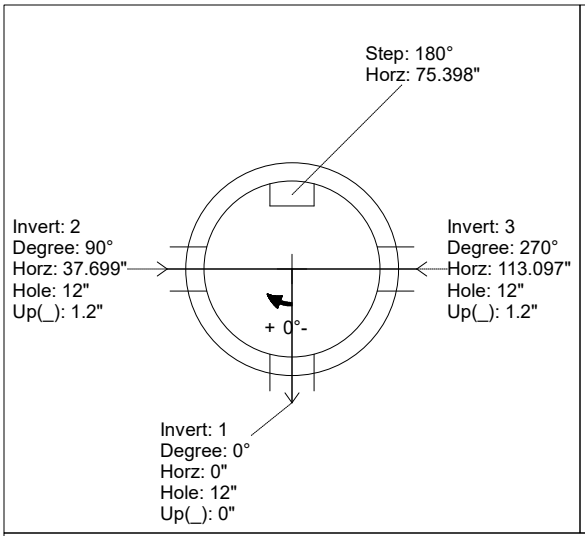

UPSIDE-DOWN VIEW (int. dimenions)

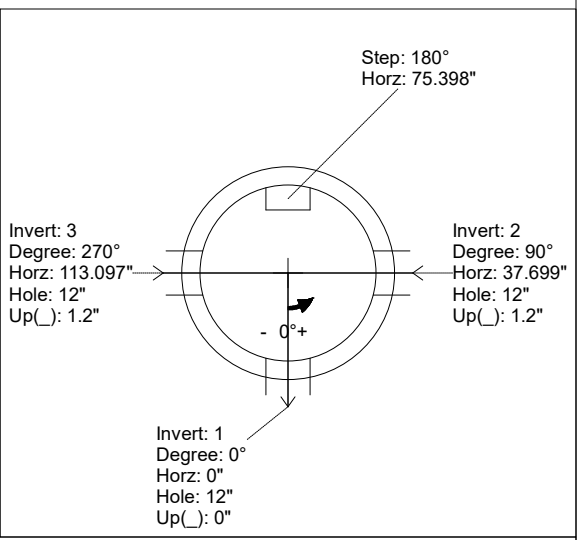

INSIDE WALL DIMENSIONS

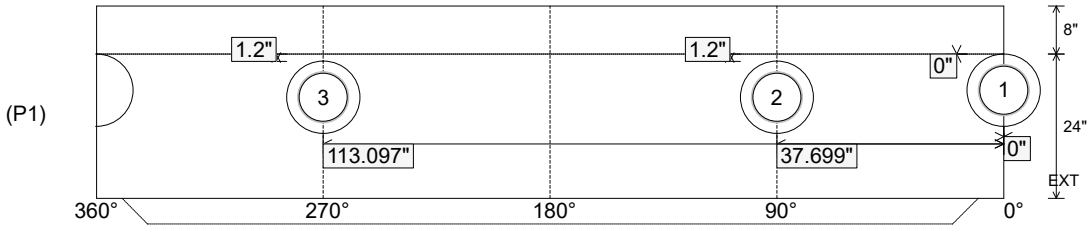

Coating (Int): Coating (Ext): Carboline Bitumastic 300M	Seam Up: Tongue Seam Dn: n/a	Wall Thickness: 5" Floor Height: 8"	Height (Int): 24" Height (Ext): 32"	Weight (Net): 4420 lb Volume (Net): 1.13cu.yd

Job Number:

25-3579

Job Name:

Lebanon Rd Clarks Run Trunk Sewer Ph 2

Structure:

MH C1

Note:

This structure is to receive an external coating of carboline 300M (supplied by ICAST)