Job Name: 25-3579 - Lebanon Rd Clarks Run Trunk Sewer Ph 2 Job Location: Danville, KY Contractor: Hubert Excavating & Contracting	Plant: 100 8/21/2026 1:04:14 PM	Tech: J. Horsley PC: C. Goff	

Structure ID: MH A33

P3 MH048CN30SP ECC CONE w/ 24" HOLE, w/Coating F/G

P4)	24" - CASTING HEIGHT - 7"	0 lb
P3)	48" - ECC CONE w/ 24" HOLE, w/Coating F/G - 30"	1961 lb
P2)	48" - MH RISER w/COATING T/G - 24"	1677 lb
P1)	48" - MH BASE w/FLANGE (08F/08EF) w/Coating T/n - 42"	5276 lb
1)	48" - MH INVERT CHANNEL - FULL HEIGHT	1440 lb
2)	JOINT WRAP - 12" WD x 048" MAC WRAP	0 lb
1)	SPECIAL EXTERNAL COATING	0 lb
2)	48" - Conseal CS-102 1.00" (Double)	0 lb
2)	Kor-N-Seal2 - S206-28	13 lb
8)	MH Step ML-10-TDS-NCR - 10"	0 lb
128.86 SqFt)	Carboline Bitumastic 300M [EXT]	0 lb
	Structure Total:	10367 lb

Structure Notes: 1. PER ASTM C478 SPECIFICATIONS.
2. CONCRETE = 4,000 PSI AT 28 DAYS.
3. CASTING BY OTHERS (HOE WT-375 SAN. F/C).
4. ALL PIECES TO HAVE EXTERIOR COATING (CARBOLINE BITUMASTIC 300M).
REINFORCING PER ASTM A615 (GRADE 60).
- CONE (As .12)
- RISER/WALLS (As .12)
- FLOOR (As .31) #5 BARS AT 12" C.C.E.W.

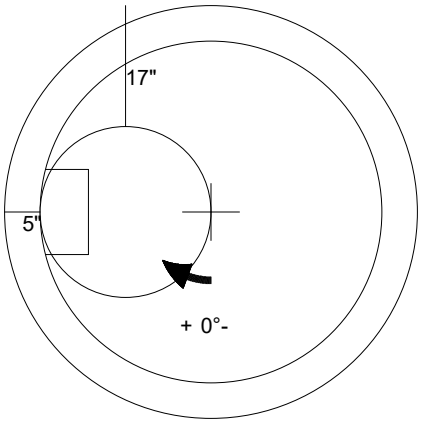

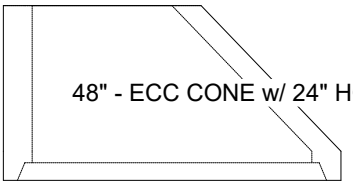

Coating (Int): Coating (Ext): Carboline Bitumastic 300M	Seam Up: Flat Seam Dn: Groove	Wall Thickness: 5"	Height (Ext): 30"	Weight (Net): 1961 lb Volume (Net): 0.5cu.yd

Job Number:
25-3579

Job Name:
Lebanon Rd Clarks Run Trunk Sewer Ph 2

Structure:
MH A33

Note:
This structure is to receive an external coating of carboline 300M (supplied by ICAST)