Job Name: 25-3452 - Churchill Downs Skye Terrace Improvements Job Location: Louisville, KY 40208 Contractor: Louisville Paving and Construction	Plant: 100 4/30/2026 4:24:09 PM	Tech: Jared - F PC: J. Jarvis	

Structure ID: S306

P2 MH048LD07ECC **MH FLAT TOP w/ 24" ECC Hole F/F**

P3) 24" - CASTING HEIGHT - 3"	0 lb
P2) 48" - MH FLAT TOP w/ 24" ECC Hole F/F - 7"	1286 lb
P1) 48" - MH BASE Custom Ht F/n - 56"	5113 lb
1) CASTING - HOE MC-420 F/C Storm	340 lb
1) 48" - Conseal CS-102 1.00"	0 lb
1) Hole - 16	0 lb
1) DOGHOUSE INVRTD - 10"x10"	0 lb
Structure Total:	6739 lb

Structure Notes:
1. PER ASTM C478 SPECIFICATIONS.
2. CONCRETE = 4,000 PSI AT 28 DAYS.
3. NO STEPS AND NO INVERT CHANNEL.
4. CASTING BY ICAST (HOE MC-420 F/C STORM)

REINFORCING PER ASTM A615 (GRADE 60).
- TOP SLAB (As .62) #5 BARS AT 6" C.C.E.W..
- RISER/WALLS (As .12)
- FLOOR (As .31) #5 BARS AT 12" C.C.E.W.

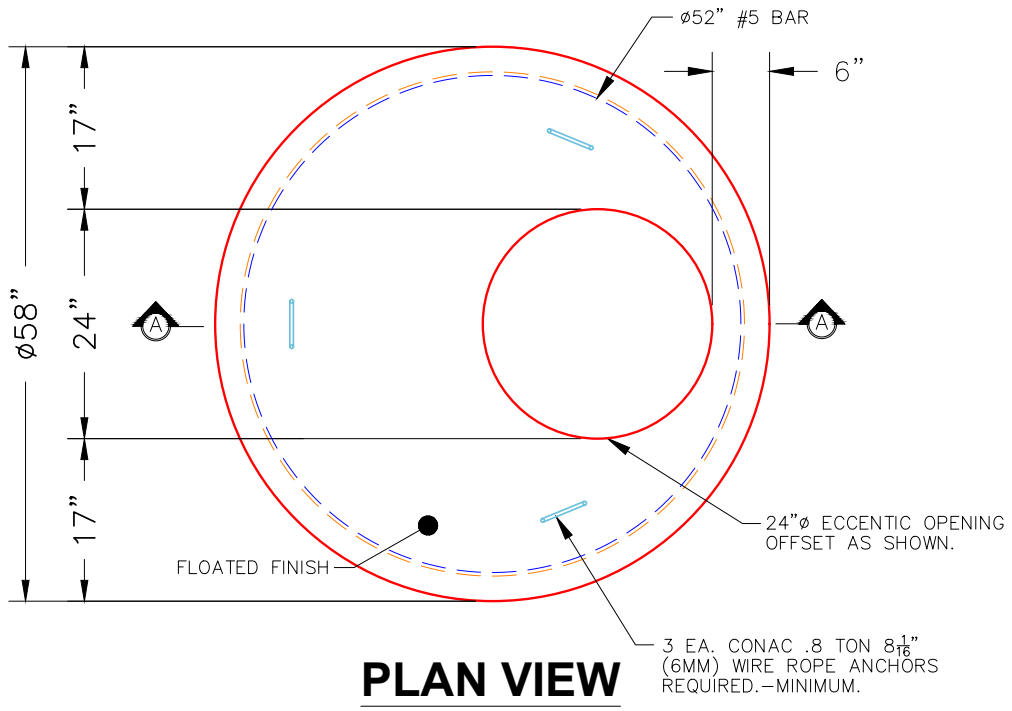

PLAN VIEW

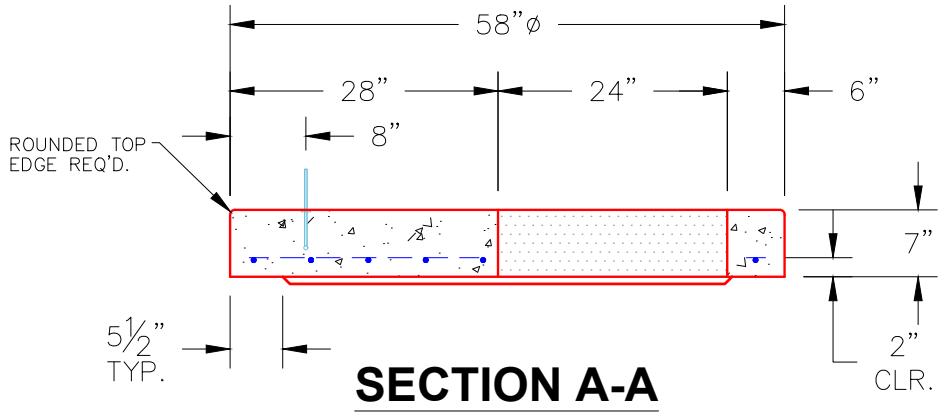

SECTION A-A

NOTES:
1. MANUFACTURED TO ASTM C–478 (LATEST REVISION).
2. CONCRETE: 4,000 PSI AT 28 DAYS.
3. REINFORCING: #5 BAR @ 6" O.C. E.W. (GRADE 60).

Coating (Int): Coating (Ext):	Seam Up: Flat Seam Dn: Flat	Wall Thickness: 5"	Height (Ext): 7"	Weight (Net): 1286 lb Volume (Net): 0.33cu.yd