25-3437 - TDOT Jackson CO CNZ250
SR 53 CULVERT REPLACEMENT
WWB2 - 1 TOTAL REQUIRED

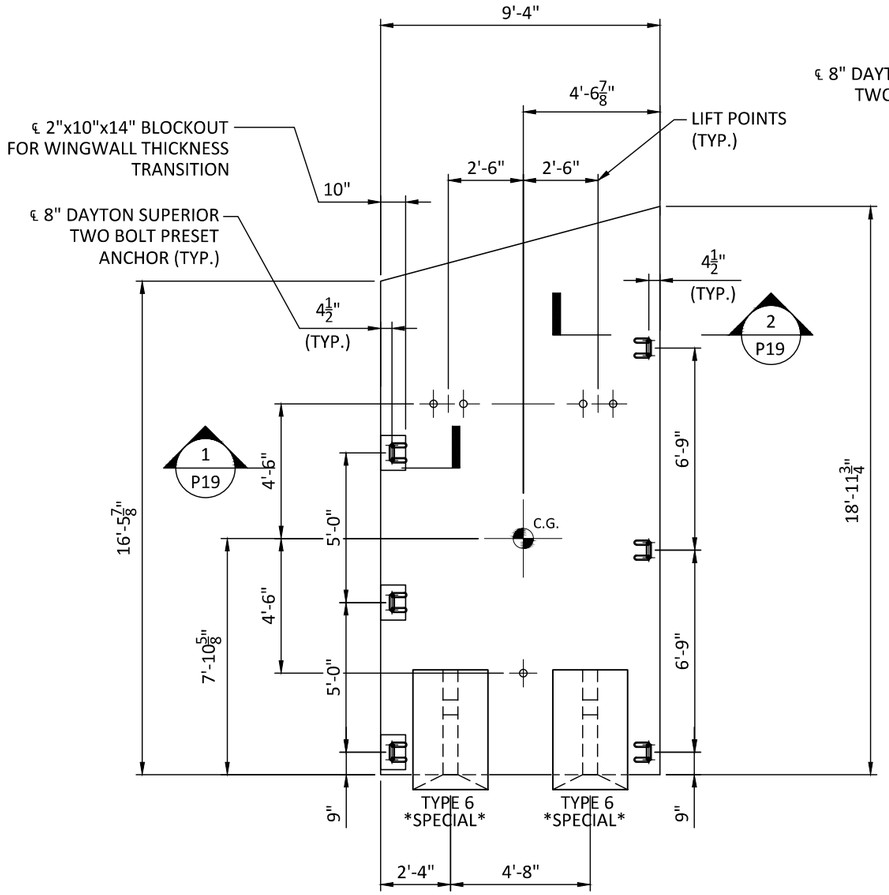

ELEVATION - WINGWALL WWB2 & WWC2

TOTAL WEIGHT = 16.8 TONS

PROVIDE (1) 19' LONG x 2' WIDE STRIP OF FILTER FABRIC

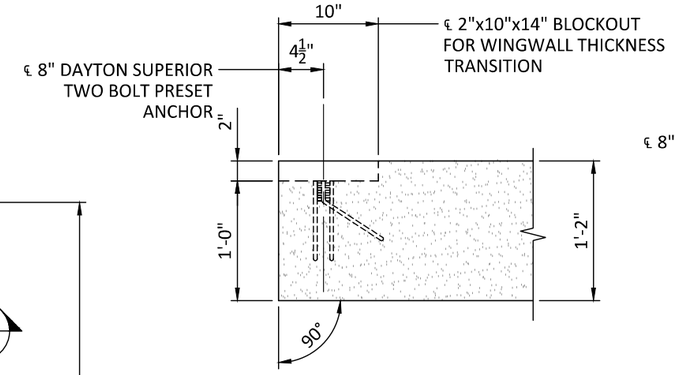

SECTION 1 P19

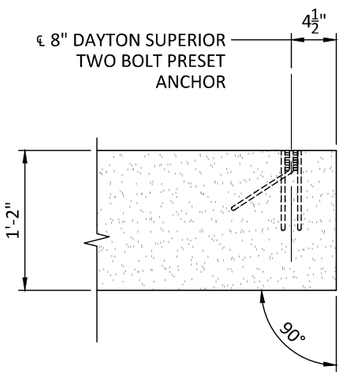

SECTION 2 P19

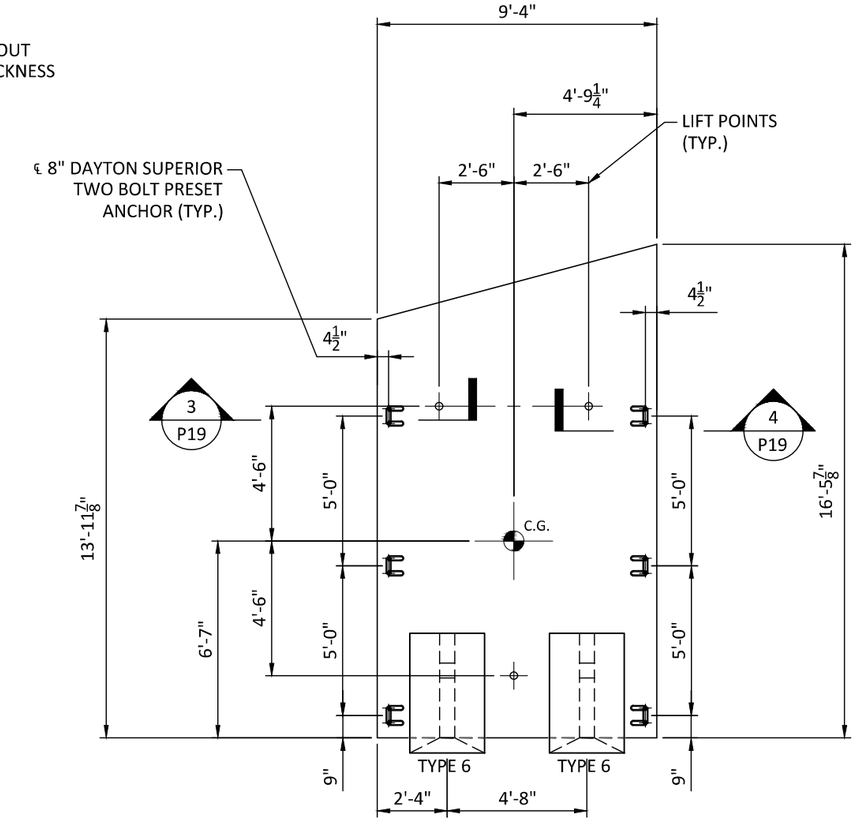

ELEVATION - WINGWALL WWB3 & WWC3

TOTAL WEIGHT = 13.0 TONS

PROVIDE (1) 17' LONG x 2' WIDE STRIP OF FILTER FABRIC

APPROVED
1/15/2026
Dedi A Krumpowicz
ENGR. DIRECTOR, STRUCTURES

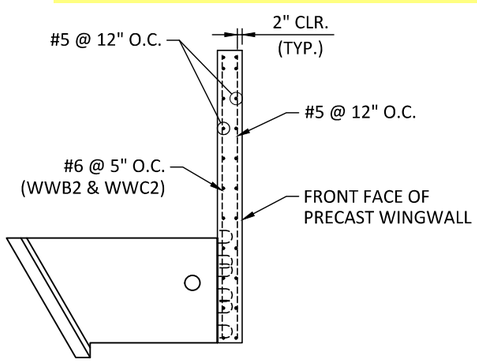

REINFORCING SECTION

NOT TO SCALE

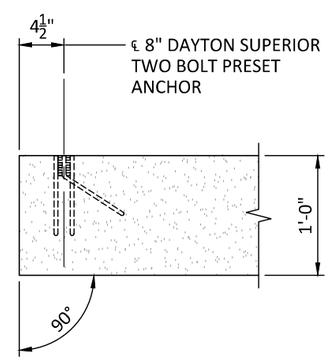

SECTION 3 P19

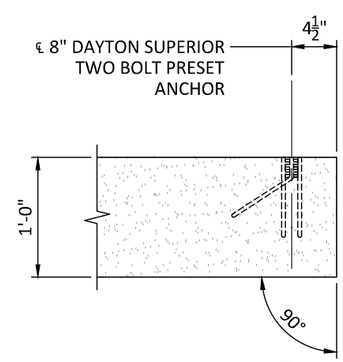

SECTION 4 P19

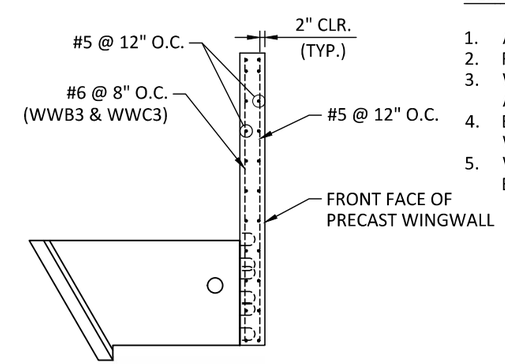

REINFORCING SECTION

NOT TO SCALE

DESIGN NOTES

1. ALL EDGES TO HAVE 3/4" CHAMFER
2. F'c = 5,000 PSI
3. WALL PANEL WILL NOT HANG LEVEL, ADJUST LIFTING CABLES AS REQUIRED
4. ELEVATION LOOKING AT BACK FACE OF WINGWALL
5. WINGWALLS TO BE CONSTRUCTED USING EPOXY COATED REINFORCEMENT

TOMMY ELMER NICHOLSON
REGISTERED ENGINEER
DEPT. OF AGRICULTURE
COMMERCE
NO. 00117780
STATE OF TENNESSEE
01/14/2026

FOR APPROVAL

	DATE	DESCRIPTION	ENG
7			
6			
5			
4			
3			
2			
1	1/14/26	NO CHANGES THIS SHEET	JJC

STATE PROJECT # 44S053-M3-005 | PIN NO. 136243.00 | BRIDGE ID # 44SR0530017

SR 53 CULVERT REPLACEMENT

LOCALE: JACKSON COUNTY | STATE: TN

PROVIDED BY: ICAST
981 W 7TH STREET
BEAVER DAM, KY 42320
270.363.2238

DESIGNED BY: PRETEK GROUP
P.O. BOX 351
BELLBROOK, OH 45305
800.241.0925

PROJECT NUMBER: 25-429
DATE: 12/17/2025
DESIGNED BY: KDK
DRAWN BY: SP
CHECKED BY: TEN

P19