Job Name: 25-3195 - The Banks Lift Station and Forcemain
Job Location: Gallatin, TN
Contractor: W&O Construction

PC: A. Chambers
TECH: Jared - F
Plant: 100

Structure ID: **WET WELL**

Spec: Sanitary	Rim: 458.5'	Sump: 276.72"	Floor (Bot): 426.5'
Type: Wet Well w/ConBlock-CDA Red	Invert: 450.56'	Floor (Top): 427.5'	Overall Height: 32'
Size: 120"	Rim to Invert: 7.94'	Floor Height: 12"	Slack: 0"

Structure Notes: .
1. PER ASTM C478 SPECIFICATIONS.
2. CONCRETE = 5,000 PSI AT 28 DAYS.
3. ADMIXTURE = CONBLOCK CDA RED.
4. HATCH SUPPLIED BY ICAST (HALLIDAY W2S 48"x48").

.
REINFORCING PER ASTM A615 (GRADE 60).
- TOP SLAB TOP LAYER = #4 BARS AT 12" C.C.E.W.
- TOP SLAB BTM LAYER = #5 BARS AT 6" C.C.E.W.
- RISER/WALLS (As .30)
- BOTTOM SLAB TONGUE = #5 BARS AT 6" C.C.E.W.
- BOTTOM SLAB = #6BARS AT 6" C.C.E.W. (DOUBLE MAT)

STRUCTURE SUMMARY:

P7) 48" x 48" - HATCH (CAST FLUSH) - 3.75"	100 lb
P6) 120" - MH FLAT TOP w/48"x48" Hatch w/ConBlock-CDA Red - 18"	14814 lb
P5) 120" - MH RISER w/CONBLOCK CDA RED - 96"	36124 lb
P4) 120" - MH RISER Custom Ht w/CONBLOCK CDA RED - 86"	32669 lb
P3) 120" - MH RISER Custom Ht w/CONBLOCK CDA RED - 86"	32669 lb
P2) 120" - MH RISER Custom Ht w/CONBLOCK CDA RED - 86"	32669 lb
P1) 120" - MH SEPARATE BASE-T EXT. 14" (170" OD) w/CONBLOCK CDA RED - 12"	29640 lb
1) JOINT WRAP - 12" WD x 120" MAC WRAP	0 lb
1) ADMIXTURE CONBLOCK CDA RED	0 lb
1) HATCH (Alum.) - HALLIDAY W2S 48"x48"	126 lb
5) 120" - Conseal CS-231 1.00" (Double)	0 lb
1) 48" x 48" - Conseal CS-231 1.00" (Double)	0 lb
2) Hole - 8	0 lb
2) Hole - 6	0 lb
1) PSX - 16Y NYLO	8 lb
Structure Total:	178819 lb

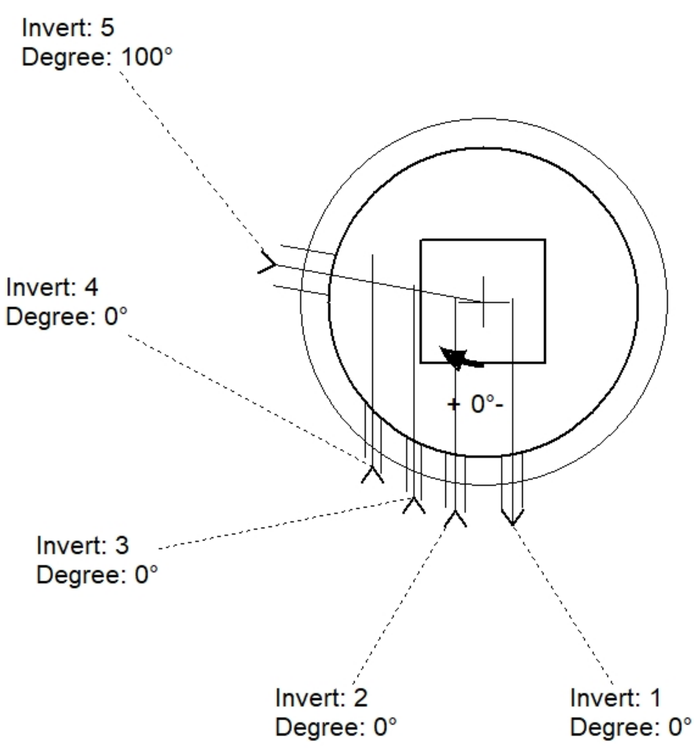

Position	Elev	Angle	Pipe	Pipe OD	Hole	Connector	Up (_)	Ref
Rim	458.5'							
Reducer								
Invert 1	455.25'	0°	4" PVC SDR35	4.25"	8"	Hole 8	67"	P5
Invert 2	455.25'	0°	4" PVC SDR35	4.25"	8"	Hole 8	67"	P5
Invert 3	452.87'	0°	4" PVC SDR35	4.25"	6"	Hole 6	39.44"	P5
Invert 4	452.75'	0°	4" PVC SDR35	4.25"	6"	Hole 6	38"	P5
Invert 5	450.56'	100°	10" PVC SDR26	10.5"	16"	PSX 16Y NYLO	9.72"	P5
Invert 6								
Invert 7								
Invert 8								

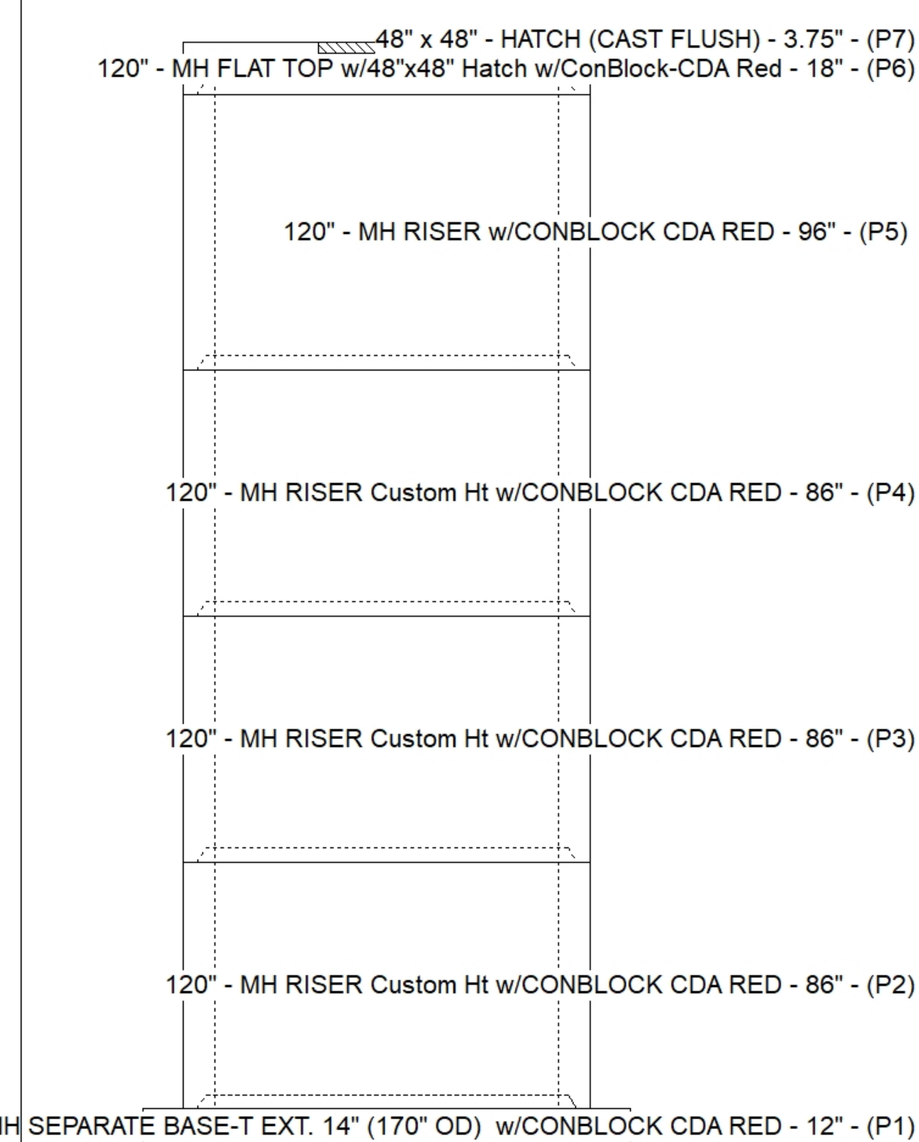

Default - Interior Dimensions

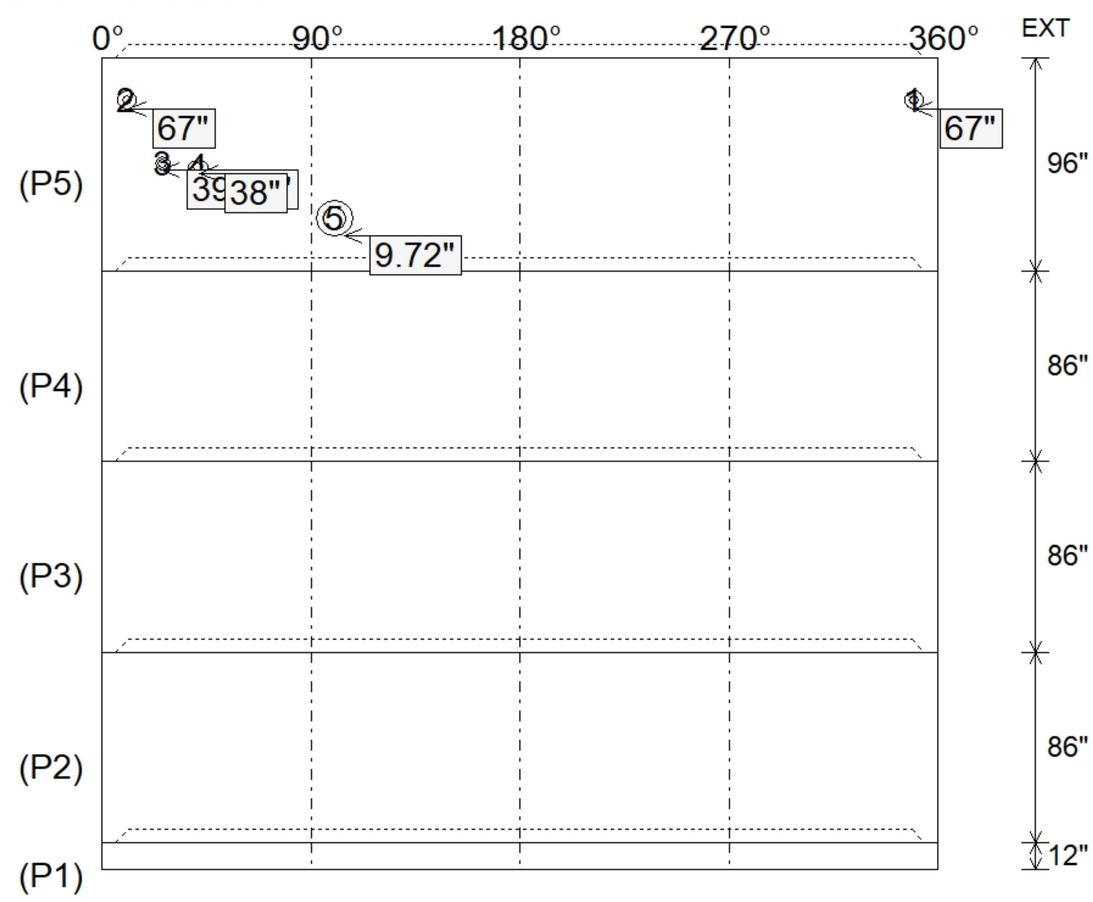

Submittal Drawing
6/1/2026 8:47:57 AM

SUBMITTAL
APPROVED BY: