Job Name: 25-3193 - KYTC Kenton Co Call 328 (251320)
Job Location: Independence, KY
Contractor: Eaton Asphalt

PC: J. Jarvis
TECH: Jared - A
Plant: 100

Structure ID: **552**

Spec: KYTC	Rim: 829.97'	Sump: 0"	Floor (Bot): 824.213'
Type: CBI TYPE A (10')	Invert: 824.88'	Floor (Top): 824.88'	Overall Height: 5.75'
Size: 24" x 36"	Rim to Invert: 5.09'	Floor Height: 8"	Slack: 0.08"

Structure Notes:
** KYTC STATE PROJECT **
1. PER KYTC CBI TY A / ASTM C-913 SPECS
2. CONCRETE: 4,000 PSI AT 28 DAYS
3. REINFORCEMENT:
   - TOP PHASE TOP: #5 BAR @ 6" C.C. E.W. (GRADE 60)
   - TOP PHASE BOTTOM: #5 BAR @ 12" C.C. E.W. (GRADE 60)
   - PIPE CHAMBER: #5 BAR @ 12" C.C. E.W. (GRADE 60)
4. NO STORM INVERT
5. NO STEPS
6. KY-206 FRAME & COVER "STORM" SUPPLIED BY ICAST - FRAME TO BE CAST INTO TOP PHASE TOP FLANGE SIDE UP
7. INVERT 3 OFFSET 14" FROM CENTER

STRUCTURE SUMMARY:

P3) 24" x 120" - CB INLET KY A 10' TOP RIGHT F/G - 10"	3398 lb
P2) 24" x 120" - CB INLET KY A 10' BOTTOM RIGHT T/G - 18"	5270 lb
P1) 24" x 36" - BOX BASE 8inW, 8inF, Variable Ht T/n - 33"	4536 lb
1) CASTING - HOE KY-206 F/C (KY TY1)	206 lb
1) This Structure Includes a Cast-in Item - KY-206 Frame (Supplied by iCast)	0 lb
1) 24" x 36" - Conseal CS-102 1.00"	0 lb
1) Hole - 24	0 lb
2) Hole - 8	0 lb
Structure Total:	13410 lb

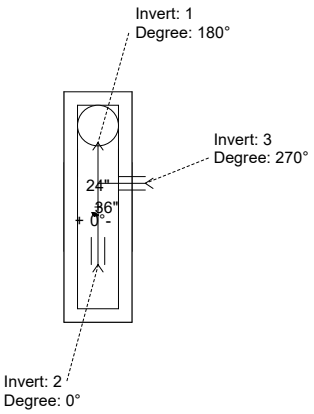

Position	Elev	Angle	Pipe	Pipe OD	Hole	Connector	Up (_)	Ref
Rim	829.97'							
Reducer								
Invert 1	824.88'	180°	18" ADS N-12	22"	24"	Hole 24	-3"	P1
Invert 2	826.8'	0°	4" HDPE (perf pipe)	4.8"	8"	Hole 8	21"	P1
Invert 3	826.8'	270°	4" HDPE (perf pipe)	4.8"	8"	Hole 8	21"	P1
Invert 4								
Invert 5								
Invert 6								
Invert 7								
Invert 8								

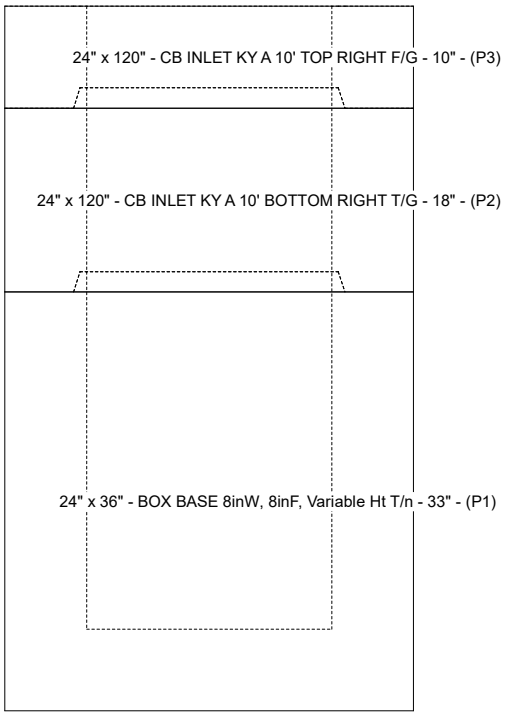

Cast (Int. Dim.) - Interior Dimensions

(P1)

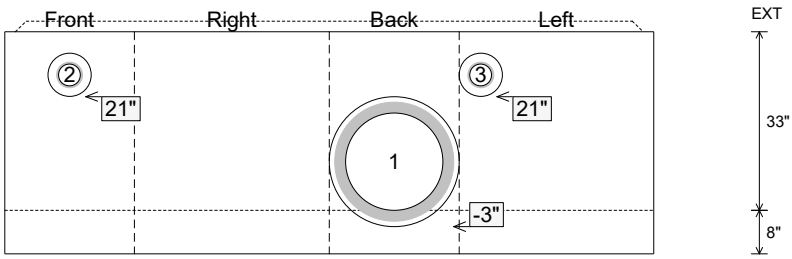

Submittal Drawing
6/4/2026 4:47:41 PM

SUBMITTAL
APPROVED BY: