Job Name: 25-3193 - KYTC Kenton Co Call 328 (251320) Job Location: Independence, KY Contractor: Eaton Asphalt	Plant: 100 6/4/2026 4:53:12 PM	Tech: Jared - A PC: J. Jarvis	

Structure ID: 533

P1 MH048BA42 MH BASE T/n

P3) 24" - CASTING HEIGHT - 8"	0 lb
P2) 48" - ECC CONE w/ 24" HOLE F/G - 24"	1550 lb
P1) 48" - MH BASE T/n - 42"	3673 lb
1) CASTING - HOE KY-510 F/C (KY TY.2)	510 lb
1) 48" - Conseal CS-102 1.00"	0 lb
1) 24" - Conseal CS-102 1.00"	0 lb
3) Hole - 24	0 lb
5) MH Step ML-10-TDS-NCR - 10"	0 lb
Structure Total:	5733 lb

Structure Notes:

** KYTC STATE PROJECT **

1. PER KYTC MH TY A / ASTM C-478 SPECS
2. CONCRETE: 4,000 PSI AT 28 DAYS
3. REINFORCEMENT: PER ASTM A615
4. NO STORM INVERT
5. STEPS AT 157.5 DEGREES
6. KY-510 FRAME & COVER "STORM" SUPPLIED BY ICAST

Rim: 833.36' Rim to Invert: 5.99' Slack: 0.88' Sump: 3" Step Position: 157.5°

Position	Elev	Angle	Ext. (cw)	Pipe	Pipe OD	Connector	Hole	Horz Size	Up (_)	Offset
Invert 1	827.37'	0°	0"	18" ADS N-12	22"	Hole 24	24"	25.133"	0"	0"
Invert 2	827.37'	85°	43"	18" ADS N-12	22"	Hole 24	24"	25.133"	0"	0"
Invert 3	827.37'	230°	116.375"	18" ADS N-12	22"	Hole 24	24"	25.133"	0"	0"
Invert 4										
Invert 5										
Invert 6										
Invert 7										
Invert 8										

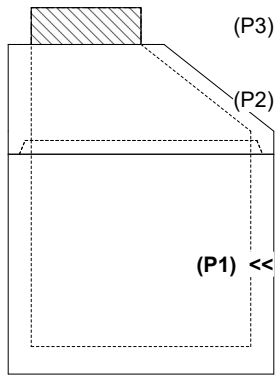

RIGHT-SIDE UP VIEW (int. dimensions)

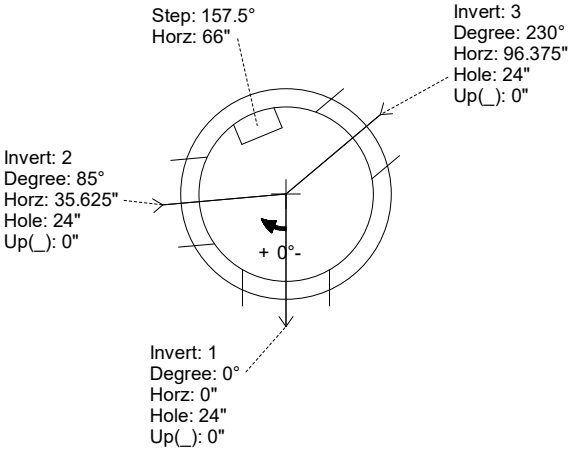

UPSIDE-DOWN VIEW (int. dimenions)

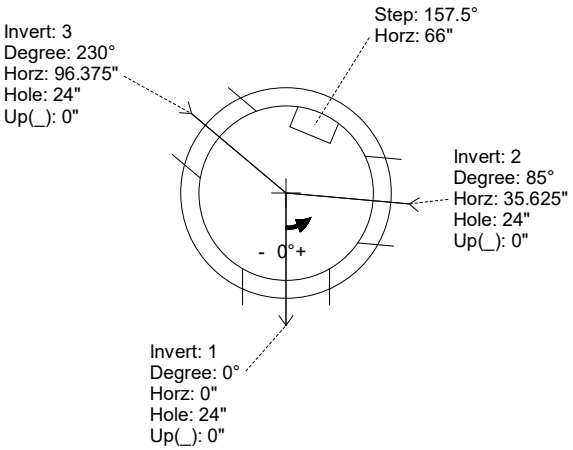

INSIDE WALL DIMENSIONS

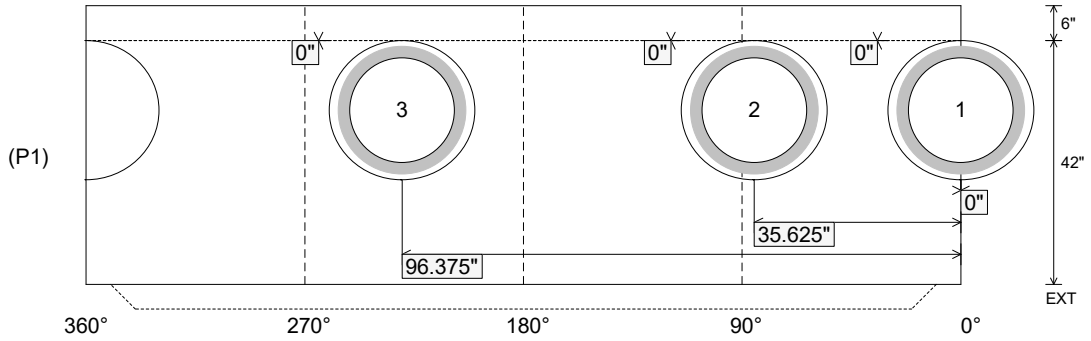

Coating (Int): Coating (Ext):	Seam Up: Tongue Seam Dn: n/a	Wall Thickness: 5" Floor Height: 6"	Height (Int): 42" Height (Ext): 48"	Weight (Net): 3673 lb Volume (Net): 0.94cu.yd