Job Name: 25-3193 - KYTC Kenton Co Call 328 (251320) Job Location: Independence, KY Contractor: Eaton Asphalt	Plant: 100 7/1/2026 12:29:40 PM	Tech: Jared - A PC: J. Jarvis	

Structure ID: 470

P1 BX24300808VF **BOX BASE 8inW, 8inF, Variable Ht**

P3) 15" x 27" - P.I.P. - BY OTHERS - 8"	0 lb
P2) 24" x 30" - CB FLAT TOP 8"W w/15"x27" HOLE - 8"	963 lb
P1) 24" x 30" - BOX BASE 8inW, 8inF, Variable Ht - 47"	5104 lb
1) CASTING - HOE KY-230-G F/G (GRADE)	237 lb
1) 24" x 30" - Conseal CS-102 1.00"	0 lb
1) 15" x 27" - Conseal CS-102 1.00"	0 lb
2) Hole - 24	0 lb
2) Hole - 4	0 lb
Structure Total:	6304 lb

Structure Notes: .
KYTC STATE PROJECT PLAN LABEL: 470
1. HOE KY-230-G F/G (GRADE) PROVIDED BY ICAST.
2. KYTC DBI TYPE 13G / ASTM C-913 SPEC'S.
3. CONCRETE = 4,000 PSI AT 28 DAYS.
4. REINFORCING PER ASTM A615 (GRADE 60).
- TOP SLAB (As .62) #5 BARS AT 6" C.C.E.W.
- WALLS (As .31) #5 BARS AT 12" C.C.E.W..
- FLOOR (As .31) #5 BARS AT 12" C.C.E.W.
5. STUB #5 BARS 12" OUT OF THE TOP OF THE SLAB

(SPACED AT 12" CC) AROUND THE 15" X 27" HOLE

Rim: 894.6' Rim to Invert: 5.28' Slack: 0.36" Sump: 0" Step Position:

Position	Elev	Angle	Ext. (cw)	Pipe	Pipe OD	Connector	Hole	Horz Size	Up (_)	Offset
Invert 1	889.32'	270°	23"	18" ADS N-12	22"	Hole 24	24"	24"	-3"	0"
Invert 2	889.32'	180°	20"	18" ADS N-12	22"	Hole 24	24"	24"	-3"	0"
Invert 3	892.6'	90°	23"	4" WEEP HOLE	4"	Hole 4	4"	4"	39.36"	0"
Invert 4	892.6'	270°	23"	4" WEEP HOLE	4"	Hole 4	4"	4"	39.36"	0"
Invert 5										
Invert 6										
Invert 7										
Invert 8										

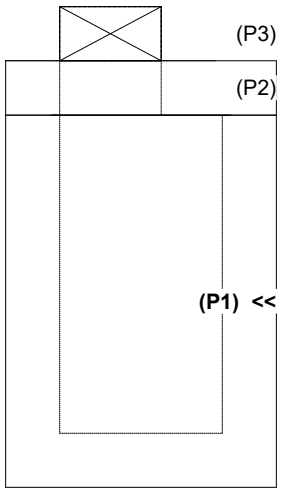

RIGHT-SIDE UP VIEW (int. dimensions)

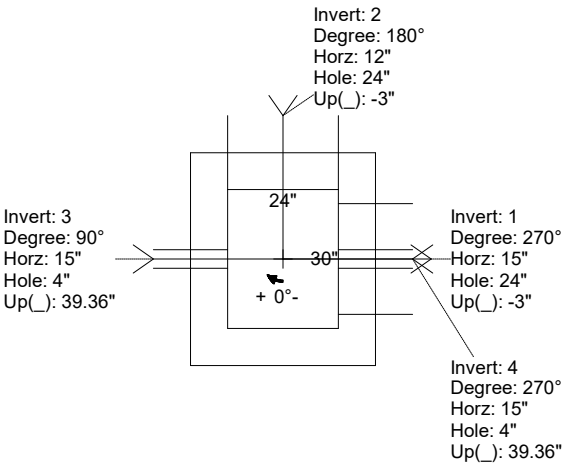

UPSIDE-DOWN VIEW (int. dimenions)

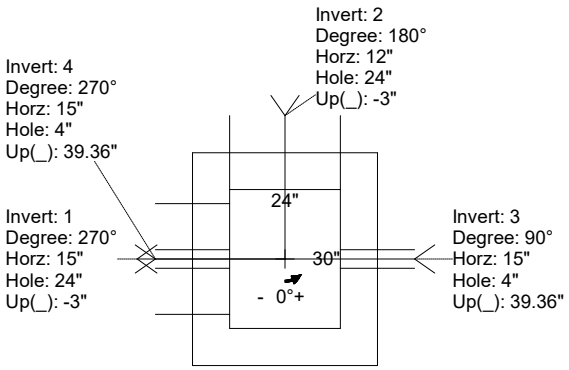

INSIDE WALL DIMENSIONS

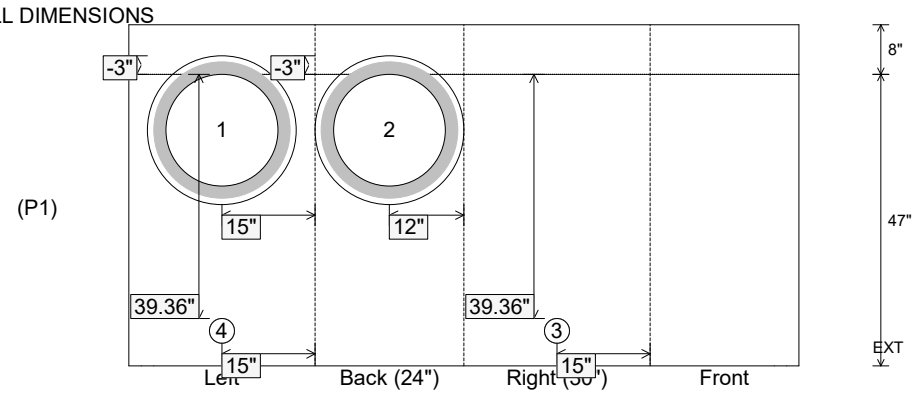

Coating (Int): Coating (Ext):	Seam Up: Flat Seam Dn: n/a	Wall Thickness: 8" Floor Height: 8"	Height (Int): 47" Height (Ext): 55"	Weight (Net): 5104 lb Volume (Net): 1.3cu.yd