Job Name: 25-3193 - KYTC Kenton Co Call 328 (251320)
Job Location: Independence, KY
Contractor: Eaton Asphalt

PC: J. Jarvis
TECH: Jared - A
Plant: 100

Structure ID: **449**

Spec: KYTC	Rim: 875.04'	Sump: 0"	Floor (Bot): 869.283'
Type: CBI TYPE A (10')	Invert: 869.95'	Floor (Top): 869.95'	Overall Height: 5.75'
Size: 24" x 36"	Rim to Invert: 5.09'	Floor Height: 8"	Slack: 0.08"

Structure Notes: .
** KYTC STATE PROJECT **
1. HOE KY 206 F/C (KY TY1) PROVIDED BY ICAST.
2. CONCRETE = 4,000 PI AT 28 DAYS.
3. REINFORCING PER ASTM A615 (GRADE 60).
- TOP PHASE (As .62) #5 BARS AT 6" C.C.E.W.
- WALLS (As .31) #5 BARS AT 12" C.C.E.W.
- FLOOR (As .31) #5 BARS AT 12" C.C.E.W.
4. KY-206 FRAME & COVER "STORM" SUPPLIED BY ICAST
FRAME TO BE CAST INTO TOP PHASE TOP FLANGE SIDE UP

STRUCTURE SUMMARY:

P3) 24" x 120" - CB INLET KY A 10' TOP RIGHT - 10"	3398 lb
P2) 24" x 120" - CB INLET KY A 10' BOTTOM RIGHT - 18"	5270 lb
P1) 24" x 36" - BOX BASE 8inW, 8inF, Variable Ht - 33"	4485 lb
1) CASTING - HOE KY-206 F/C (KY TY1)	206 lb
1) 24" x 36" - Conseal CS-102 1.00"	0 lb
1) Hole - 20	0 lb
2) Hole - 8	0 lb
Structure Total:	13359 lb

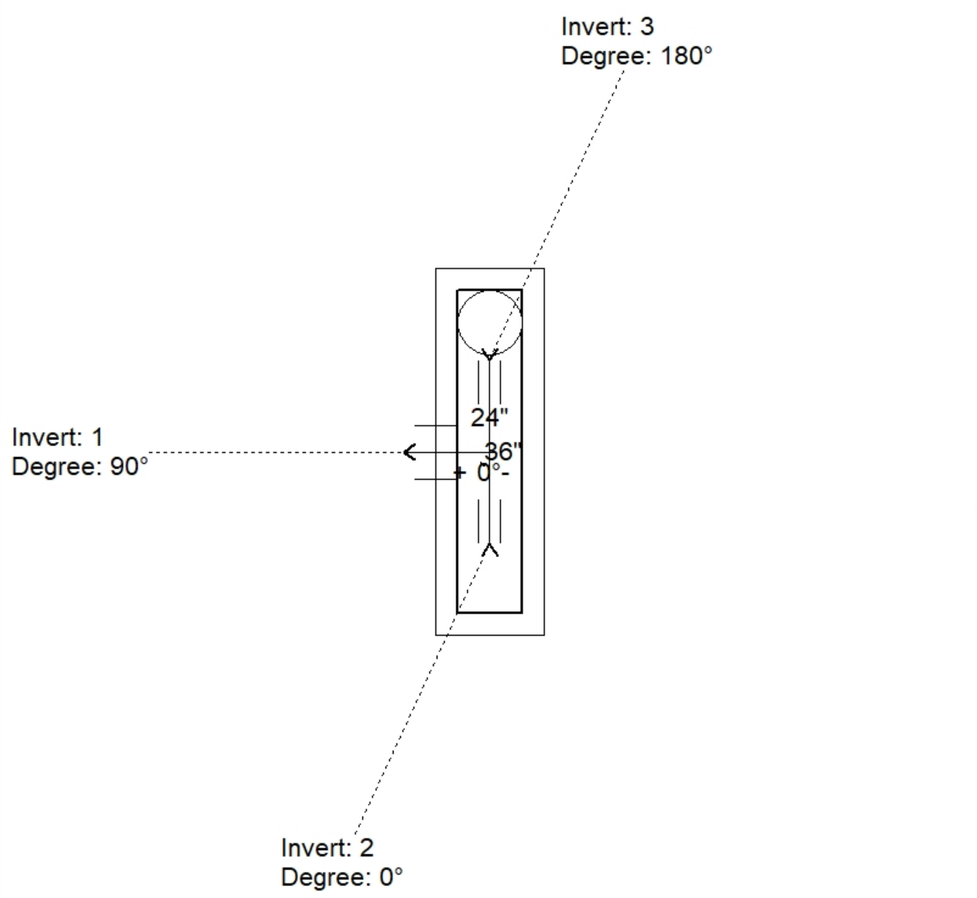

Position	Elev	Angle	Pipe	Pipe OD	Hole	Connector	Up (_)	Ref
Rim	875.04'							
Reducer								
Invert 1	869.95'	90°	15" ADS N-12	18"	20"	Hole 20	-2.5"	P1
Invert 2	871.87'	0°	4" HDPE (perf pipe)	4.8"	8"	Hole 8	21.04"	P1
Invert 3	871.87'	180°	4" HDPE (perf pipe)	4.8"	8"	Hole 8	21.04"	P1
Invert 4								
Invert 5								
Invert 6								
Invert 7								
Invert 8								

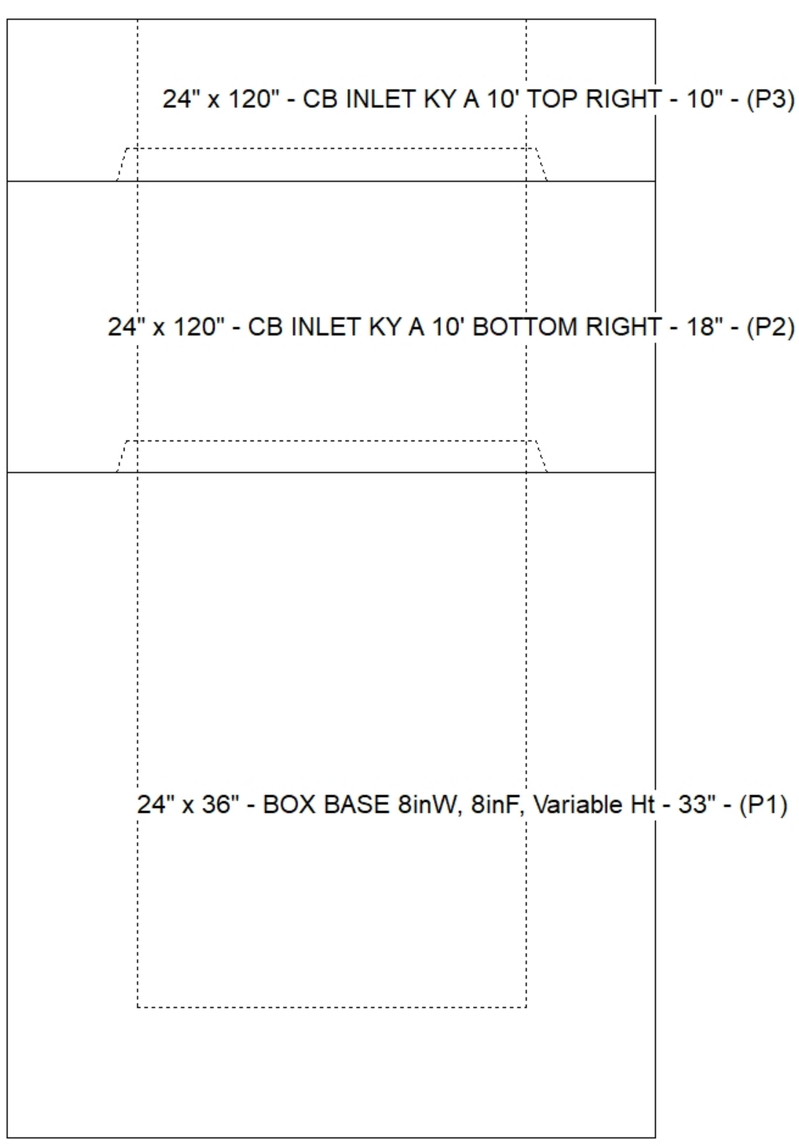

Default - Interior Dimensions

(P1)

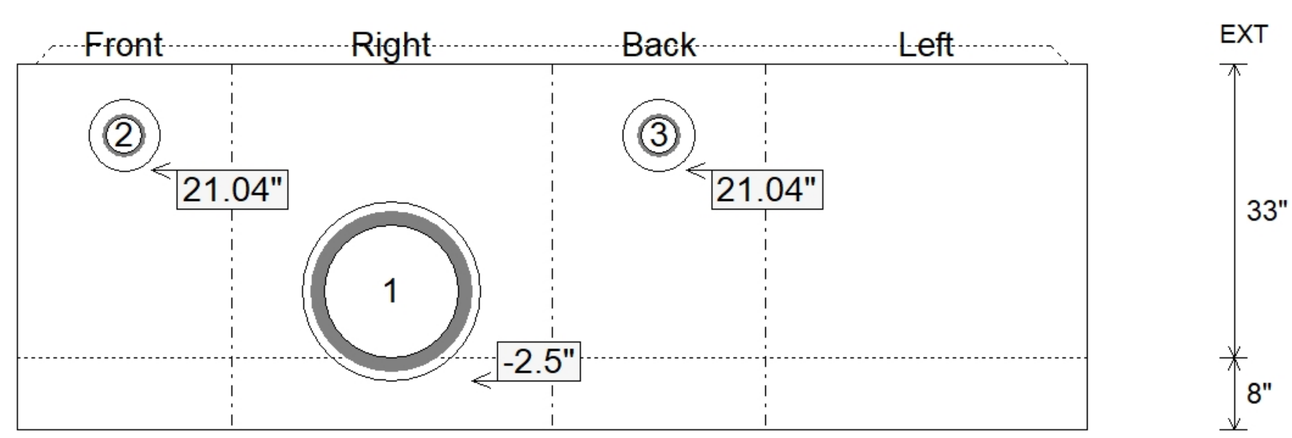

Submittal Drawing
7/10/2026 11:53:54 AM

SUBMITTAL
APPROVED BY: