Job Name: 25-3193 - KYTC Kenton Co Call 328 (251320) Job Location: Independence, KY Contractor: Eaton Asphalt	Plant: 100 7/1/2026 12:30:47 PM	Tech: Jared - A PC: J. Jarvis	

Structure ID: 266

P1 MH048BAVF **MH BASE Custom Ht**

P3) 24" - CASTING HEIGHT - 7"	0 lb
P2) 48" - CON CONE w/24" HOLE - 36"	2252 lb
P1) 48" - MH BASE Custom Ht - 35"	3604 lb
1) 48" - MH INVERT CHANNEL - FULL HEIGHT	1440 lb
1) CASTING - HOE MC-375 F/C Sanitary	271 lb
1) 48" - Conseal CS-102 1.00" (Double)	0 lb
2) PSX - 16L NYLO	16 lb
5) MH Step ML-10-TDS-NCR - 10"	0 lb
Structure Total:	7583 lb

Structure Notes: .
1. HOE MC-375-WT F/C SANITARY PROVIDED BY ICAST.
2. PER ASTM C478 SPECIFICATIONS.
3. CONCRETE = 4,000 PSI AT 28 DAYS.
4. REINFORCING PER ASTM A615 (GRADE 60).
- CONE (As .12)
- RISER/WALLS (As .12)
- FLOOR (As .31) #5 BARS AT 12" C.C.E.W.

Rim: 783.74' Rim to Invert: 6.4' Slack: 0.8" Sump: 2" Step Position: 0°

Position	Elev	Angle	Ext. (cw)	Pipe	Pipe OD	Connector	Hole	Horz Size	Up (_)	Offset
Invert 1	777.34'	0°	0"	12" PVC SDR35	12.5"	PSX 16L NYLO	16"	16.312"	0"	0"
Invert 2	777.44'	176°	89.082"	12" PVC SDR35	12.5"	PSX 16L NYLO	16"	16.312"	1.2"	0"
Invert 3										
Invert 4										
Invert 5										
Invert 6										
Invert 7										
Invert 8										

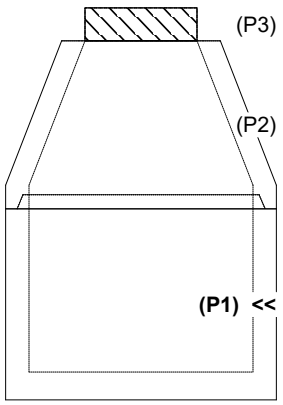

RIGHT-SIDE UP VIEW (int. dimensions)

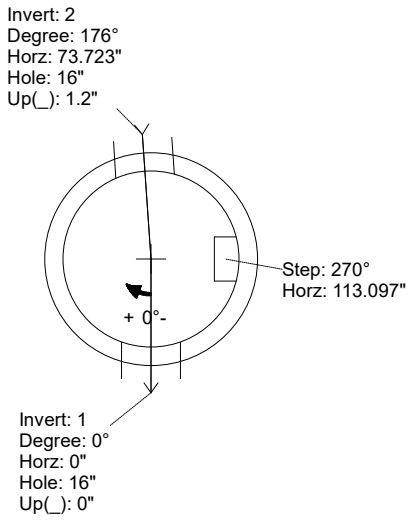

UPSIDE-DOWN VIEW (int. dimenions)

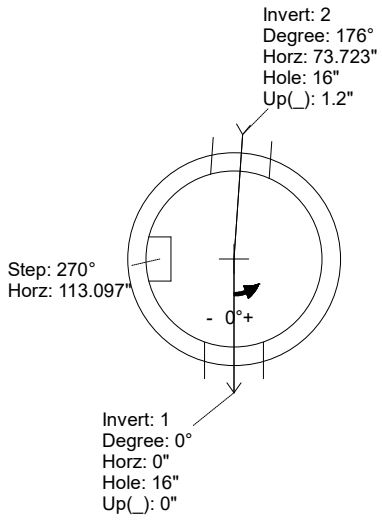

INSIDE WALL DIMENSIONS

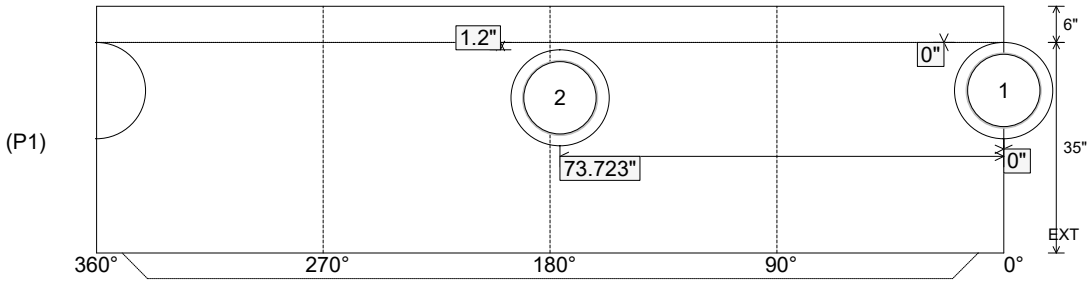

Coating (Int): Coating (Ext):	Seam Up: Tongue Seam Dn: n/a	Wall Thickness: 5" Floor Height: 6"	Height (Int): 35" Height (Ext): 41"	Weight (Net): 3604 lb Volume (Net): 0.92cu.yd