Job Name: 25-3187 - Carter Caves WTP Upgrades Ph 3 Job Location: Olive Hill, KY Contractor: Walker Principles	Plant: 100 7/6/2026 11:03:58 AM	Tech: J. Horsley PC: E. Bradley	

Structure ID: SCUM VV

P2 BX060060-08W-SP **CB FLAT TOP 8"W w/36"X36 Hatch**

P2) 60" x 60" - CB FLAT TOP 8"W w/36"X36 Hatch - 8"	3007 lb
P1) 60" x 60" - BX BASE w/FLANGE 08W/08F/06EF - 84"	20477 lb
1) LADDER (Alum.) - HALLIDAY L1B 72in Wall mount ladder	50 lb
1) LADDER (Alum.) - HALLIDAY L1EAA Ladder Extension Safey Post	65 lb
1) HATCH (Alum.) - HALLIDAY W1S 36"x36"	78 lb
1) SECONDARY POUR - WALLS	0 lb
1) 60" x 60" - Conseal CS-102 1.00" (Double)	0 lb
2) Z-Lok - C107-3	2 lb
1) A-Lok - 0150	1 lb
Structure Total:	23681 lb

Structure Notes: .
1. PER ASTM C913 SPECIFICATIONS.
2. CONCRETE = 4,500 PSI AT 28 DAYS.
3. NO STEPS / NO INVERT CHANNEL.
4. HATCH BY ICAST (HALLIDAY W1S 36"x36")
.
REINFORCING PER ASTM A615 (GRADE 60).
- TOP SLAB (As .62) T#5 BARS AT 6" C.C.E.W.
- WALLS (As .47) #5 BARS AT 8" C.C.E.W.
- FLOOR (As .47) #5 BARS AT 8" C.C.E.W.

GENERAL NOTES:

1. MANUFACTURED TO ASTM C-913 (LATEST REVISION).
2. CONCRETE: 4,500 PSI AT 28 DAYS.
3. REINFORCING: #5 BAR @ 6" E.W. O.C. (GRADE 60).
4. WEIGHT: 3,007 LBS
5. HALLIDAY 36" X 36" W1S HATCH BY ICAST.
6. HATCH TO BE CAST IN TOP SLAB.

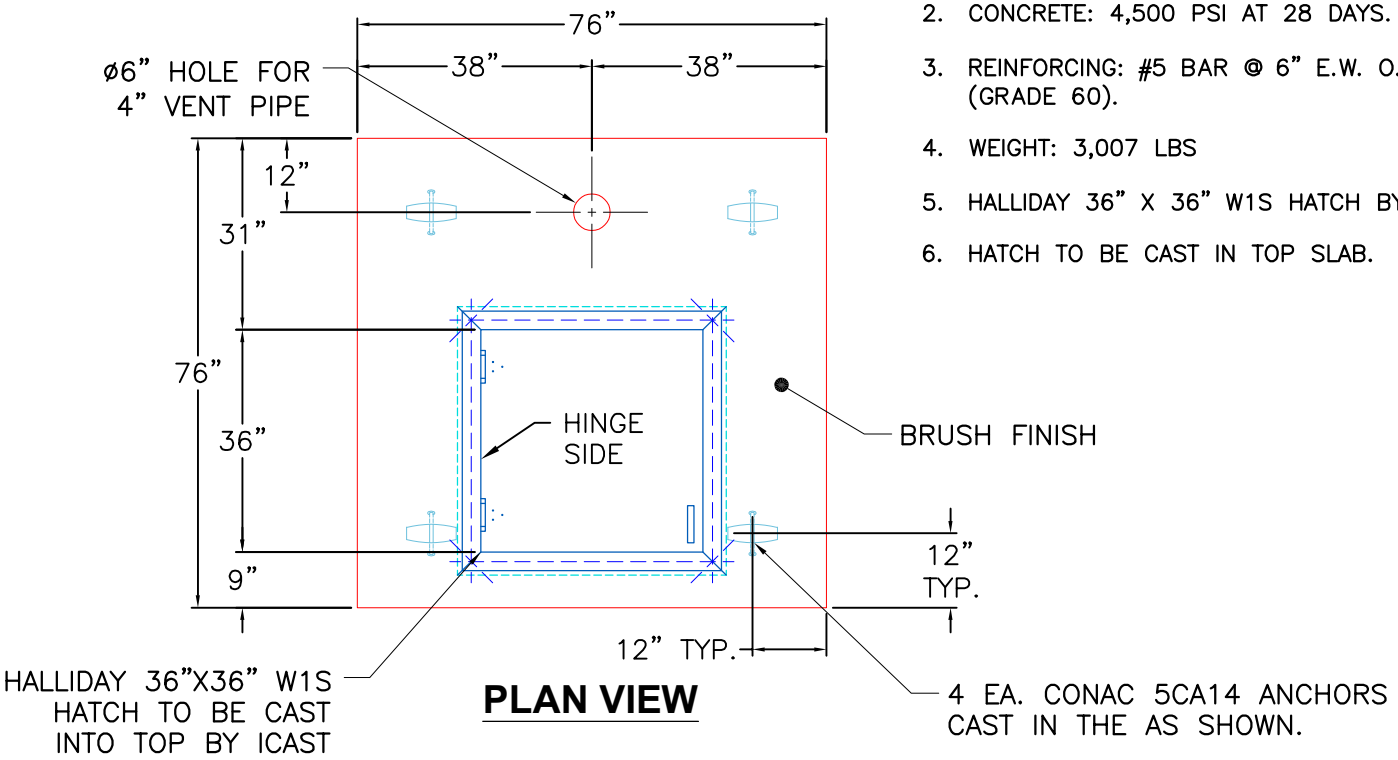

PLAN VIEW

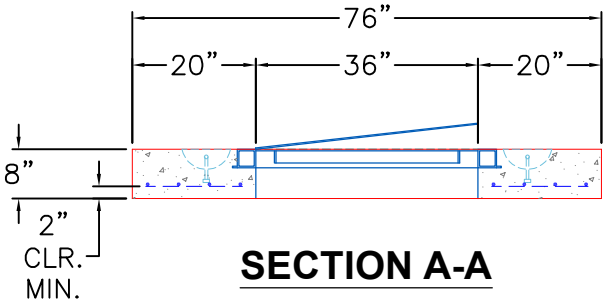

SECTION A-A

Coating (Int): Coating (Ext):	Seam Up: Flat Seam Dn: Flat	Wall Thickness: 8"	Height (Ext): 8"	Weight (Net): 3007 lb Volume (Net): 0.77cu.yd