Job Name: 25-3187 - Carter Caves WTP Upgrades Ph 3 Job Location: Olive Hill, KY Contractor: Walker Principles	Plant: 100 7/6/2026 11:03:59 AM	Tech: J. Horsley PC: E. Bradley	

Structure ID: RAS/WAS VV

P2 BX072072-08TS-S CB FLAT TOP 8"W w/36"X36 Hatch

P2) 72" x 72" - CB FLAT TOP 8"W w/36"X36 Hatch - 8"	4329 lb	
P1) 72" x 72" - BX BASE w/FLANGE 08W/08F/06EF - 88"	25544 lb	
1) LADDER (Alum.) - HALLIDAY L1B 72in Wall mount ladder	50 lb	
1) LADDER (Alum.) - HALLIDAY L1EAA Ladder Extension Safey Post	65 lb	
1) HATCH (Alum.) - HALLIDAY W1S 36"x36"	78 lb	
1) SECONDARY POUR - WALLS	0 lb	
1) 72" x 72" - Conseal CS-102 1.00"	0 lb	
5) A-Lok - 0150	5 lb	
Structure Total:	30071 lb	

Structure Notes: .
1. PER ASTM C913 SPECIFICATIONS.
2. CONCRETE = 4,500 PSI AT 28 DAYS.
3. NO STEPS / NO INVERT CHANNEL.
4. HATCH BY ICAST (HALLIDAY W1S 36"x36")
.
REINFORCING PER ASTM A615 (GRADE 60).
- TOP SLAB (As .62) #5 BARS AT 6" C.C.E.W.
- RISER/WALLS (As .18)

GENERAL NOTES:

1. MANUFACTURED TO ASTM C-913 (LATEST REVISION).
2. CONCRETE: 4,500 PSI AT 28 DAYS.
3. REINFORCING: #5 BAR @ 6" E.W. O.C. (GRADE 60).
4. WEIGHT: 4,329 LBS
5. HALLIDAY 36" X 36" W1S HATCH BY ICAST.
6. HATCH TO BE CAST IN TOP SLAB.

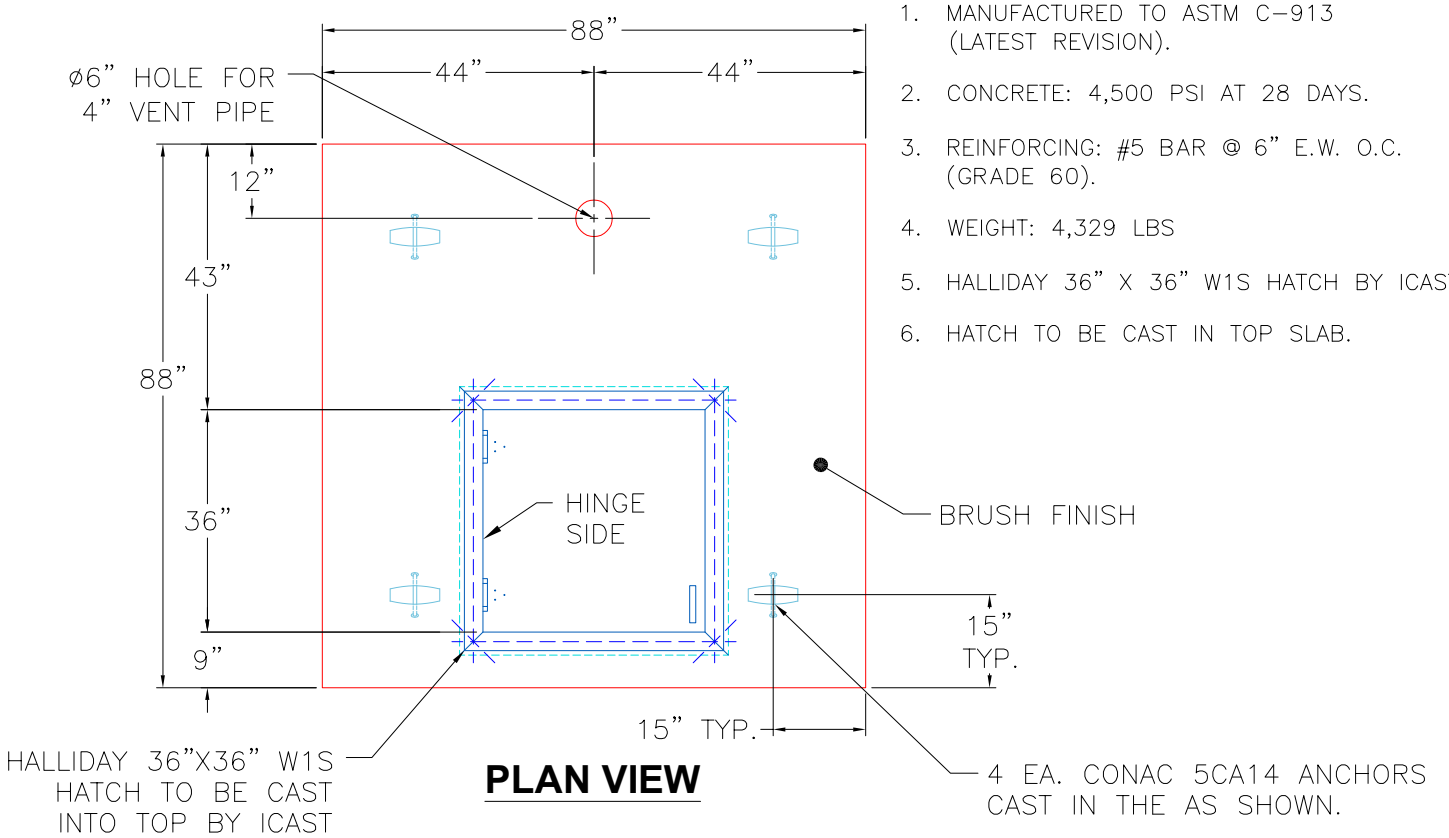

PLAN VIEW

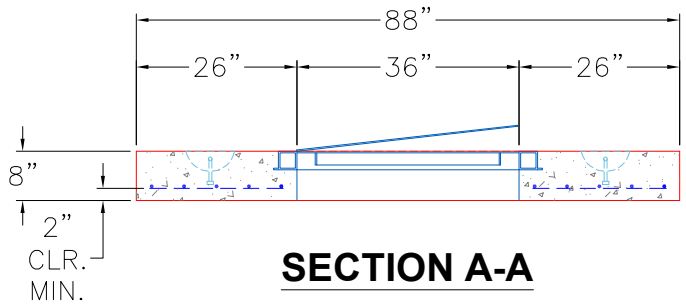

SECTION A-A

Coating (Int): Coating (Ext):	Seam Up: Flat Seam Dn: Flat	Wall Thickness: 8"	Height (Ext): 8"	Weight (Net): 4329 lb Volume (Net): 1.11cu.yd