Job Name: 25-3062 Portland Bypass Job Location: Portland, TN Contractor: Scotty's Contracting & Stone, LLC	Plant: Beaver Dam 6/1/2026 9:36:08 AM	Tech: J. Coppage PC: C. Goff	

Structure ID: MD-11

P2 MH084LD145S MH FLAT TOP w/48"x48" Hole

P3) 48" x 48" - CASTING HEIGHT - 0"	0 lb
P2) 84" - MH FLAT TOP w/48"x48" Hole - 14.5"	5512 lb
P1) 84" - MH BASE Custom Ht - 69"	15431 lb
1) CASTING - JBS TYPE 39 TDOT GRATES (48" X 48")	459 lb
1) 84" - Conseal CS-102 1.00"	0 lb
1) 48" x 48" - Conseal CS-102 1.00"	0 lb
1) Hole - 54	0 lb
1) Hole - 53	0 lb
Structure Total:	21402 lb

Structure Notes:

1. PER ASTM C478 SPECIFICATIONS.
2. CONCRETE = 4,000 PSI AT 28 DAYS.
3. JBS TDOT TYPE 39 BY ICAST
4. REINFORCING PER TDOT DRAWING D-CB-39RB ASTM A615 (GRADE 60).
5. PRODUCTION TO PLACE A 4.5" DEEP X 2" WIDE RECESS IN THE TOP INSIDE OF THE 0 DEGREE AND THE 180 DEGREE WALL OF THE TOP SLAB.

NOTES:

1. MANUFACTURED TO ASTM C-478 (LATEST REVISION).
2. CONCRETE: 4,000 PSI AT 28 DAYS.
3. REINFORCING: PER TDOT DRAWING D-CB-39RB OR D-RL-3 FOR WWM OPTION.

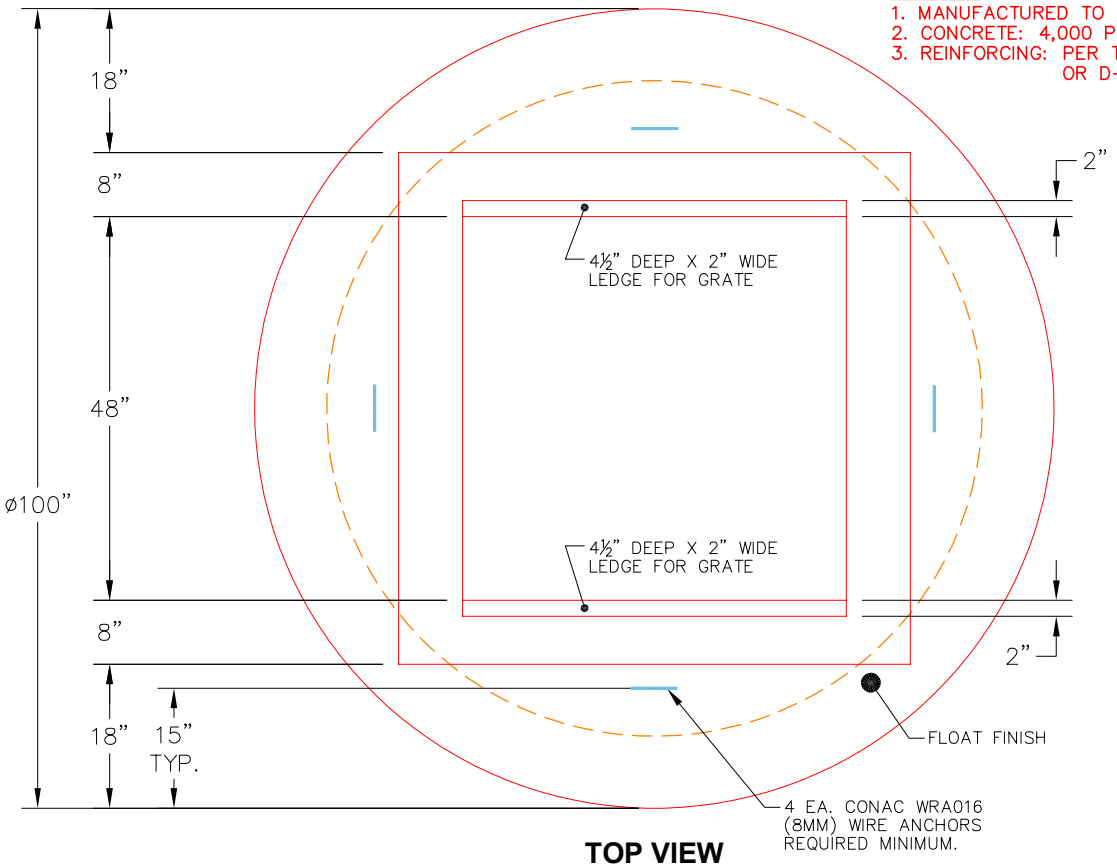

TOP VIEW

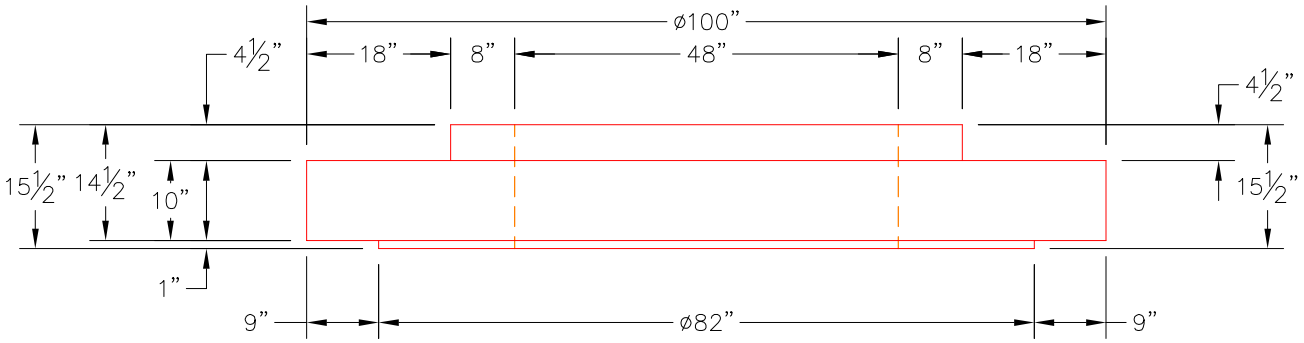

FRONT VIEW

Coating (Int): Coating (Ext):	Seam Up: Flat Seam Dn: Flat	Wall Thickness: 8"	Height (Ext): 14.5"	Weight (Net): 5512 lb Volume (Net): 1.41cu.yd