Job Name: 25-3062 Portland Bypass
Job Location: Portland, TN
Contractor: Scotty's Contracting & Stone, LLC

PC: C. Goff
TECH: J. Coppage
Plant: Beaver Dam

Structure ID: **CB-16**

Spec: TDOT	Rim: 815.01'	Sump: 3.5"	Floor (Bot): 804.362'
Type: CB TYPE 12S	Invert: 805.32'	Floor (Top): 805.028'	Overall Height: 10.583'
Size: 36" x 48"	Rim to Invert: 9.69'	Floor Height: 8"	Slack: 0.78"

Structure Notes: 1. PER TDOT D-CB-12S / ASTM C913 SPEC'S.
2. CONCRETE = 4,000 PSI AT 28 DAYS.
3. NO INVERT CHANNEL.
4. JBS 3123 MOD SINGLE SET BY ICAST
5. REINFORCING PER ASTM A615 (GRADE 60).
** SEE TDOT STD DRAWING D-CB-12S **
- TOP SLAB - DBL MAT #5 BARS.
- WALLS (As .47) #5 BARS AT 8" C.C.E.W.
- FLOOR (As .47) #5 BARS AT 8" C.C.E.W.
6. VERIFY THE REQUIRED PIPE SIZES & I.E.'S INFORMATION NOT PROVIDED IN THE PLANS.

STRUCTURE SUMMARY:

P4) 28" x 34" - CASTING HEIGHT - 7"	0 lb
P3) 36" x 48" - BX FLAT LID 8"W - TDOT 12P (28"x34" Hole) - 10"	2044 lb
P2) 36" x 48" - BOX RISER 8inW - 42"	5601 lb
P1) 36" x 48" - BOX BASE 8inW, 8inF - 60"	8602 lb
1) CASTING - JBS-3123 MODIFIED SET	250 lb
2) 36" x 48" - Conseal CS-102 1.00"	0 lb
1) 28" x 34" - Conseal CS-102 1.00"	0 lb
2) Hole - 40	0 lb
2) Hole - 6	0 lb
Structure Total:	16497 lb

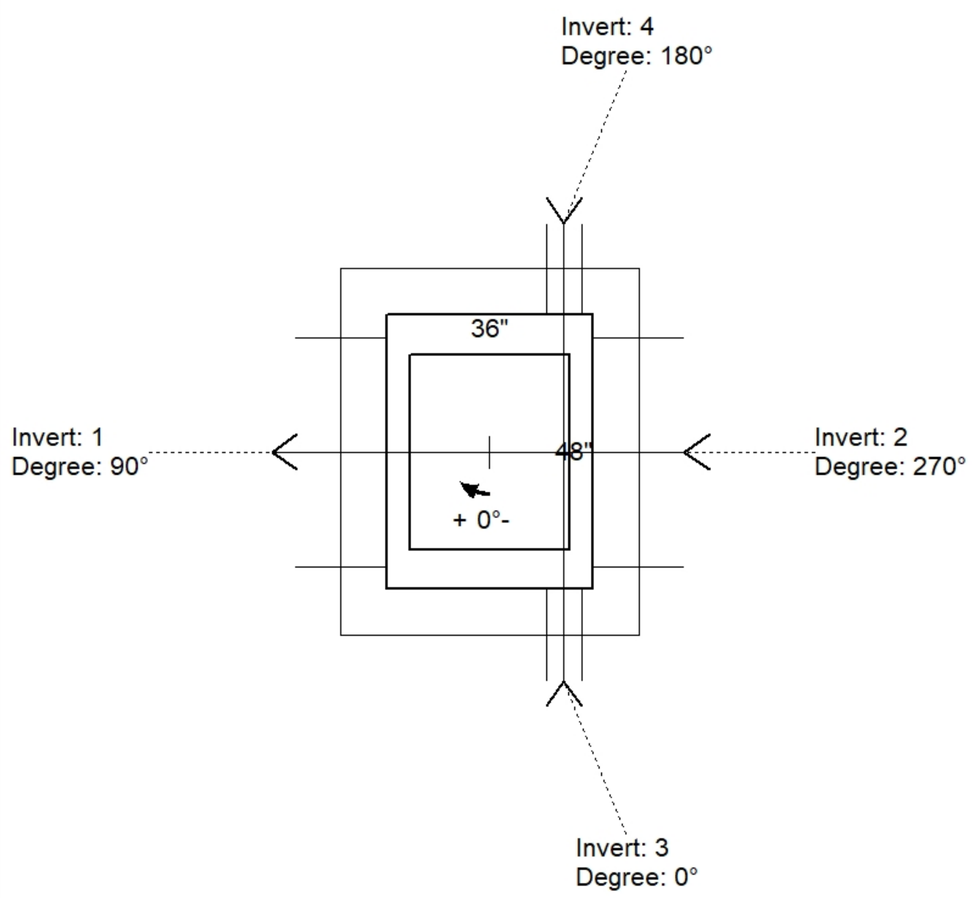

Position	Elev	Angle	Pipe	Pipe OD	Hole	Connector	Up (_)	Ref
Rim	815.01'							
Reducer								
Invert 1	805.32'	90°	30" RCP B WALL	37"	40"	Hole 40	0"	P1
Invert 2	805.32'	270°	30" RCP B WALL	37"	40"	Hole 40	0"	P1
Invert 3	812.01'	0°	4" HDPE (perf pipe)	4.8"	6"	Hole 6	21.38"	P2
Invert 4	812.01'	180°	4" HDPE (perf pipe)	4.8"	6"	Hole 6	21.38"	P2
Invert 5								
Invert 6								
Invert 7								
Invert 8								

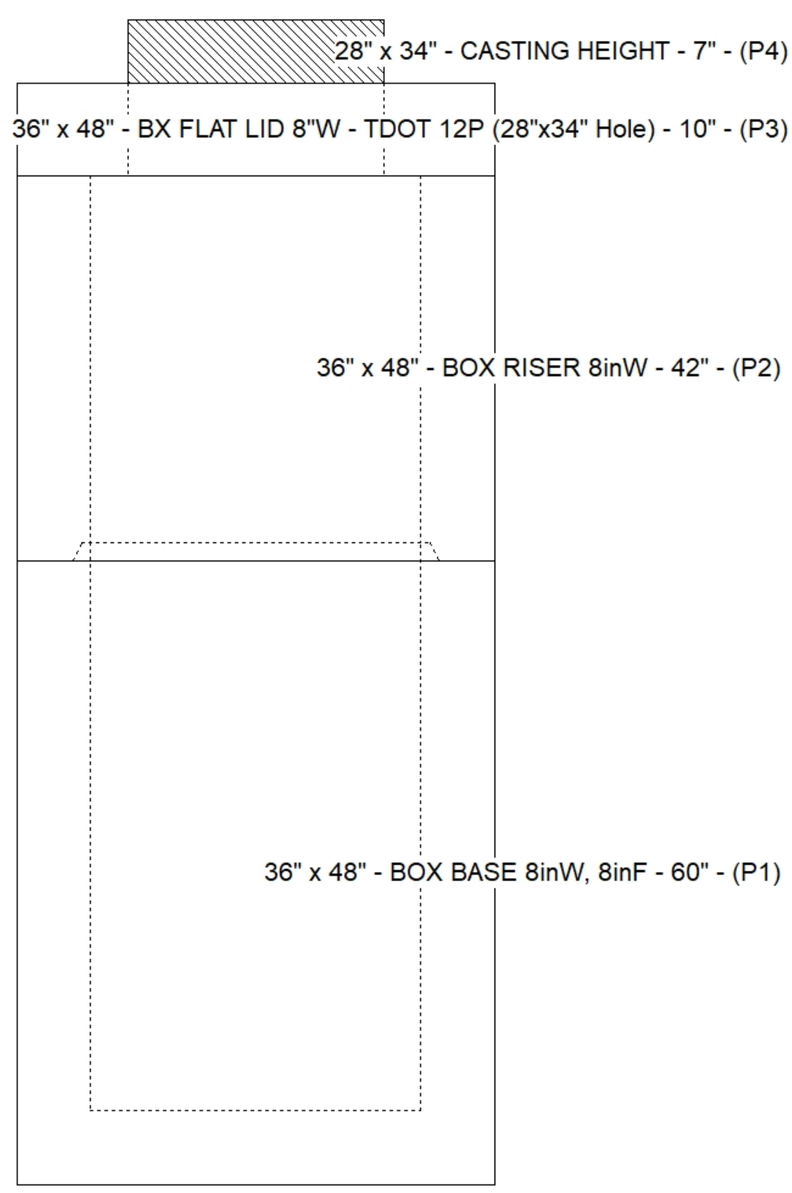

Default - Interior Dimensions

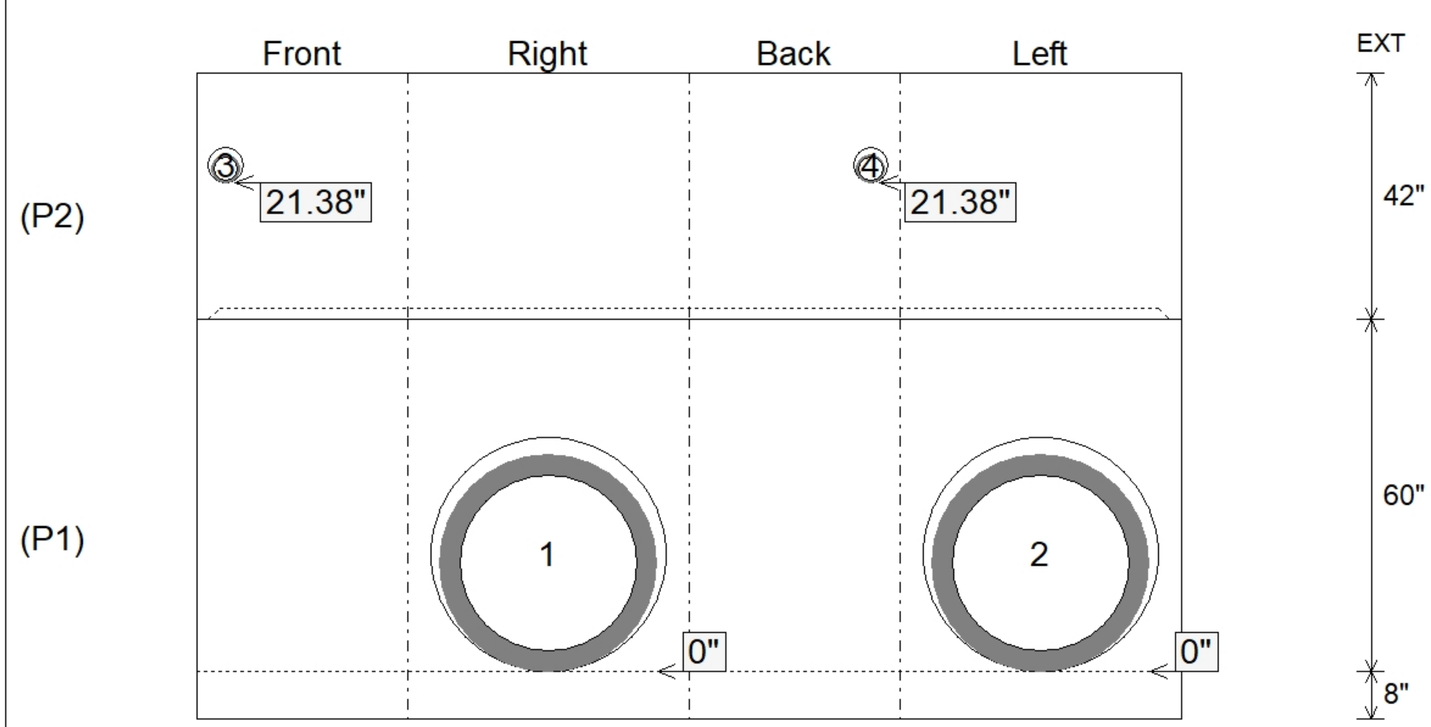

Submittal Drawing
6/4/2026 2:22:07 PM

SUBMITTAL
APPROVED BY: