Job Name: 25-3062 Portland Bypass Job Location: Portland, TN Contractor: Scotty's Contracting & Stone, LLC	Plant: Beaver Dam 6/1/2026 8:24:13 AM	Tech: J. Coppage PC: C. Goff	

Structure ID: CB-15

P2 MH072LD10SP **MH FLAT TOP - TDOT NO 12 (28"x34" Hole)**

P3) 28" x 34" - CASTING HEIGHT - 7"	0 lb
P2) 72" - MH FLAT TOP - TDOT NO 12 (28"x34" Hole) - 10"	4406 lb
P1) 72" - MH BASE Custom Ht - 75"	12276 lb
1) CASTING - JBS-3123 MODIFIED SET	250 lb
1) 72" - Conseal CS-102 1.00"	0 lb
1) 28" x 34" - Conseal CS-102 1.00"	0 lb
2) Hole - 58 x 42	0 lb
1) Hole - 6	0 lb

Structure Total:	16932 lb

Structure Notes:
1. PER TDOT D-CB-12RB / ASTM C478 SPEC'S.
2. CONCRETE = 4,000 PSI AT 28 DAYS.
3. JBS 3123 MOD SINGLE SET BY ICAST
4. REINFORCING PER ASTM A615 (GRADE 60).

** PER TDOT STD DRAWING D-CB-12RB **
- TOP SLAB - DBL MAT #5 BARS.
- RISER (As .18)
- FLOOR (As .62) #5 BARS AT 6" C.C.E.W.

NOTES:
1. MANUFACTURED TO ASTM C-478 (LATEST REVISION).
2. CONCRETE: 4,000 PSI AT 28 DAYS.
3. REINFORCING: PER TDOT DRAWING D-CB-12RA OR D-RL-1 FOR WWM OPTION.

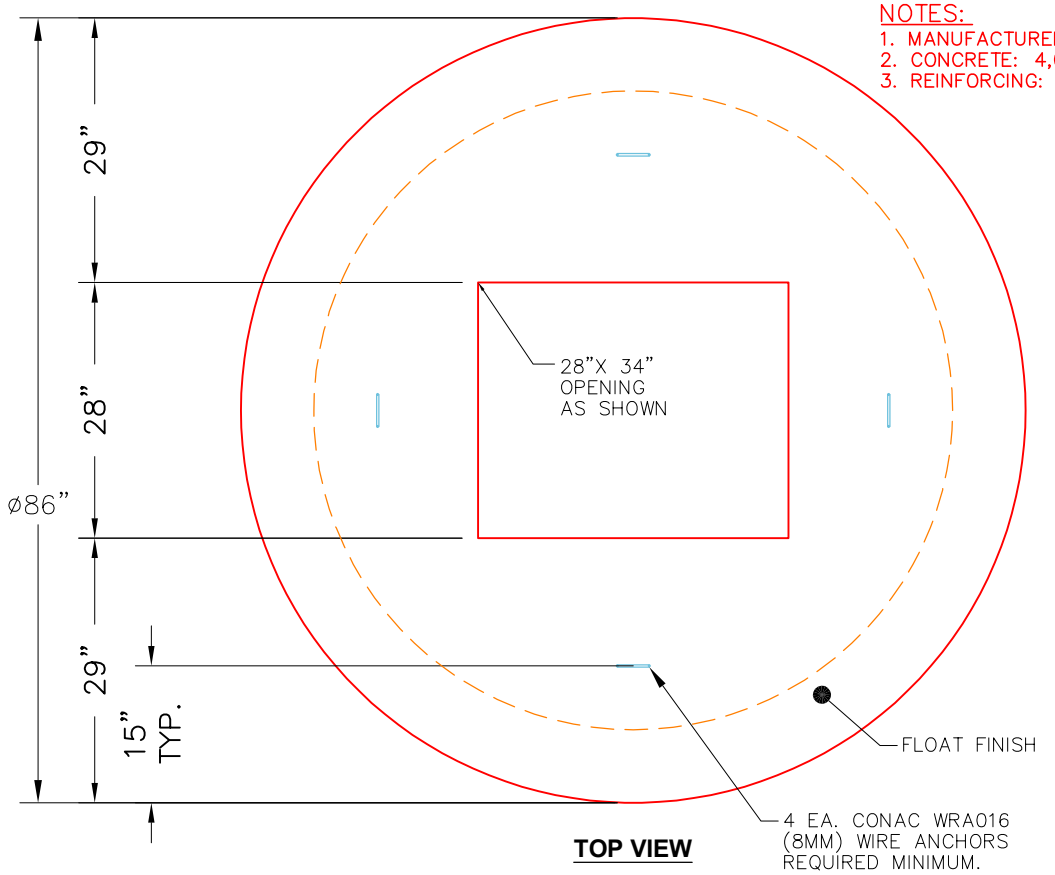

TOP VIEW

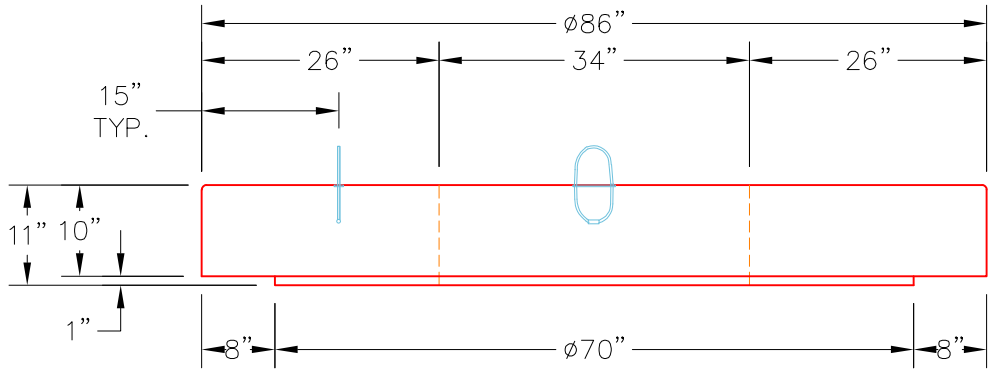

FRONT VIEW

Coating (Int): Coating (Ext):	Seam Up: Flat Seam Dn: Flat	Wall Thickness: 7"	Height (Ext): 10"	Weight (Net): 4406 lb Volume (Net): 1.12cu.yd