Job Name: 25-2952 - KYTC Jefferson Co Call 106 (251315)
Job Location: Indiana, KY
Contractor: Louisville Paving and Construction

PC: J. Jarvis
TECH: J. Horsley - A
Plant: 100

Structure ID: **72**

Spec: KYTC	Rim: 552.09'	Sump: 0"	Floor (Bot): 543.923'
Type: CBI TYPE B (10')	Invert: 544.59'	Floor (Top): 544.59'	Overall Height: 8.167'
Size: 24" x 24"	Rim to Invert: 7.5'	Floor Height: 8"	Slack: 0"

Structure Notes:
** KYTC STATE PROJECT **
1. PER KYTC CBI TYPE B (10') / ASTM C-913 SPECS
2. CONCRETE: 4,000 PSI AT 28 DAYS
3. REINFORCEMENT:
   - TOP PHASE TOP: #5 BAR @ 6" C.C. E.W. (GRADE 60)
   - TOP PHASE BOTTOM: #5 BAR @ 12" C.C. E.W. (GRADE 60)
   - PIPE CHAMBER & RISER: #5 BAR @ 12" C.C. E.W. (GRADE 60)
4. KY-345 FRAMES & GRATE SUPPLIED BY OTHERS - POURED IN PLACE BY OTHERS

STRUCTURE SUMMARY:

P4) 8" x 120" - CB INLET KY B 10' TOP F/G - 9"	1660 lb
P3) 24" x 120" - CB INLET KY B 10' BOTTOM SAG T/G - 17"	2650 lb
P2) 24" x 24" - BOX RISER 8inW T/G - 24"	2062 lb
P1) 24" x 24" - BOX BASE 8inW, 8inF, Variable Ht T/n - 40"	4340 lb
2) 24" x 24" - Conseal CS-102 1.00"	0 lb
1) Hole - 18	0 lb
Structure Total:	10712 lb

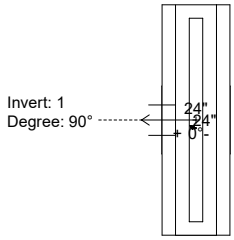

Position	Elev	Angle	Pipe	Pipe OD	Hole	Connector	Up (_)	Ref
Rim	552.09'							
Reducer								
Invert 1	544.59'	90°	12" HDPE	14.5"	18"	Hole 18	-3"	P1
Invert 2								
Invert 3								
Invert 4								
Invert 5								
Invert 6								
Invert 7								
Invert 8								

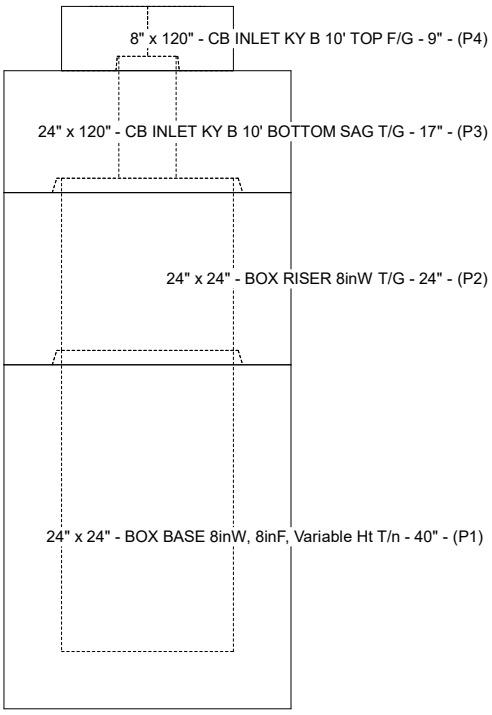

Cast (Int. Dim.) - Interior Dimensions

(P1)

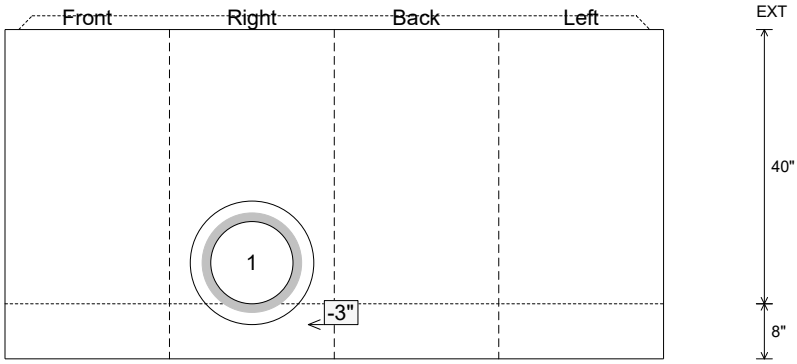

Submittal Drawing
6/12/2026 2:12:51 PM

SUBMITTAL
APPROVED BY: