Job Name: 25-2952 - KYTC Jefferson Co Call 106 (251315)
Job Location: Indiana, KY
Contractor: Louisville Paving and Construction

PC: J. Jarvis
TECH: J. Horsley - A
Plant: 100

Structure ID: **66**

Spec: KYTC	Rim: 552.49'	Sump: 0"	Floor (Bot): 543.573'
Type: DBI TYPE 13G	Invert: 544.24'	Floor (Top): 544.24'	Overall Height: 8.917'
Size: 24" x 30"	Rim to Invert: 8.25'	Floor Height: 8"	Slack: 0"

Structure Notes:
** KYTC STATE PROJECT **
1. PER KYTC DBI TYPE 13G / ASTM C-913 SPECS
2. CONCRETE: 4,000 PSI AT 28 DAYS
3. REINFORCEMENT:
   - FLAT LID: DOUBLE MAT #5 BAR @ 6" C.C E.W. (GRADE 60)
   - PIPE CHAMBER & RISER: #5 BAR @ 12" C.C. E.W. (GRADE 60)
4. HOE KY-230G FRAME & GRATE SUPPLIED BY OTHERS - POURED IN PLACE BY OTHERS
5. STUB #5 BAR @ 12" C.C. (GRADE 60) 6" OUT TOP OF FLAT LID AROUND 15" X 27" OPENING FOR FIELD POUR TIE-IN

STRUCTURE SUMMARY:

P4) 15" x 27" - P.I.P. - BY OTHERS - 8"	0 lb
P3) 24" x 30" - CB FLAT TOP 8"W w/15"x27" HOLE F/F - 8"	963 lb
P2) 24" x 30" - BOX RISER 8inW F/G - 48"	4494 lb
P1) 24" x 30" - BOX BASE 8inW, 8inF, Variable Ht T/n - 35"	3887 lb
2) 24" x 30" - Conseal CS-102 1.00"	0 lb
1) 15" x 27" - Conseal CS-102 1.00"	0 lb
2) Hole - 24	0 lb
1) Hole - 18	0 lb
2) Hole - 4	0 lb
Structure Total:	9345 lb

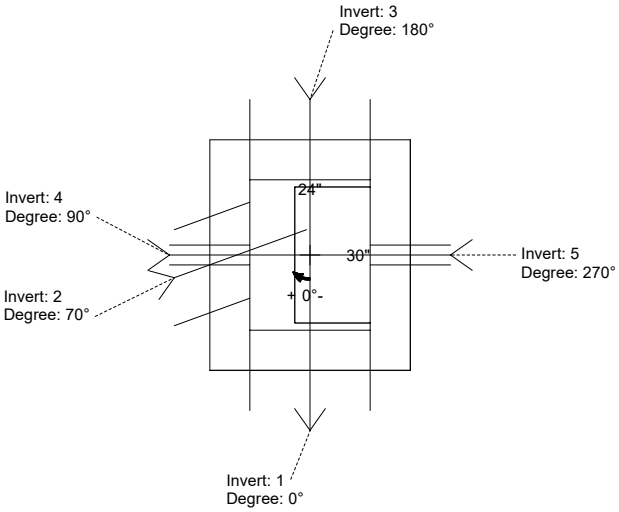

Position	Elev	Angle	Pipe	Pipe OD	Hole	Connector	Up (_)	Ref
Rim	552.49'							
Reducer								
Invert 1	544.24'	0°	18" HDPE	21.2"	24"	Hole 24	-3"	P1
Invert 2	544.24'	70°	12" HDPE	14.5"	18"	Hole 18	-3"	P1
Invert 3	544.24'	180°	18" HDPE	21.2"	24"	Hole 24	-3"	P1
Invert 4	550.49'	90°	4" WEEP HOLE	4"	4"	Hole 4	38"	P2
Invert 5	550.49'	270°	4" WEEP HOLE	4"	4"	Hole 4	38"	P2
Invert 6								
Invert 7								
Invert 8								

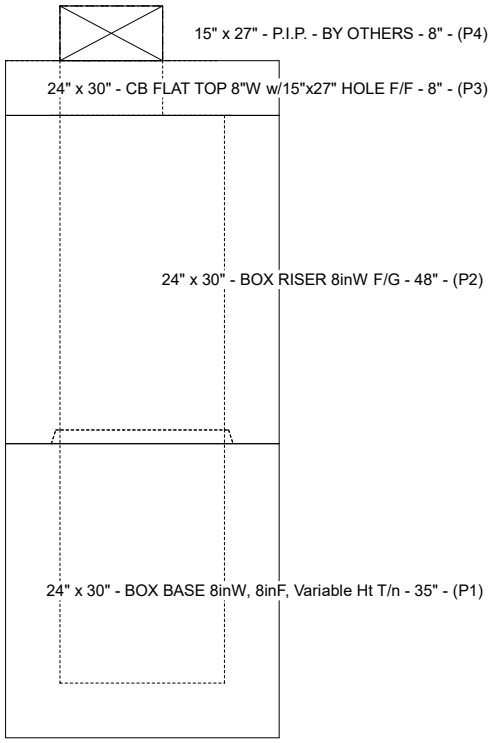

Cast (Int. Dim.) - Interior Dimensions

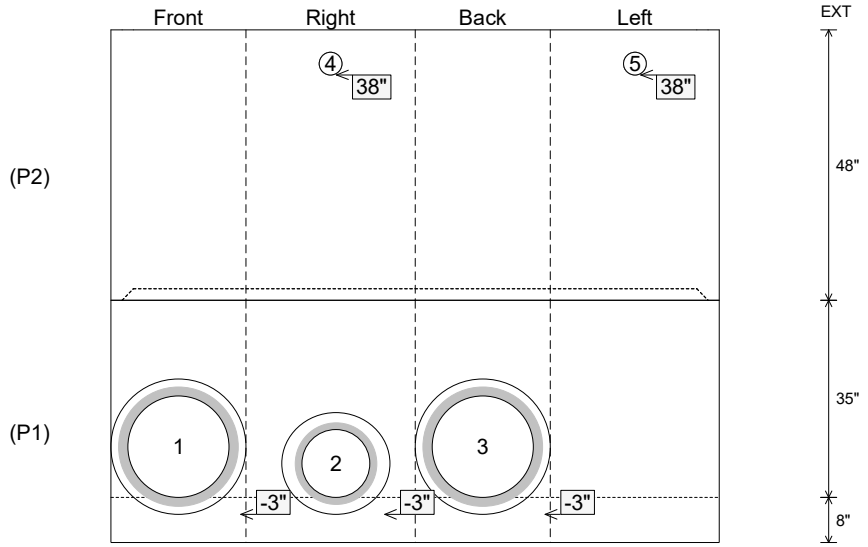

Submittal Drawing
6/12/2026 2:13:00 PM

SUBMITTAL
APPROVED BY: