Job Name: 25-2952 - KYTC Jefferson Co Call 106 (251315) Job Location: Indiana, KY Contractor: Louisville Paving and Construction	Plant: 100 10/2/2026 9:10:32 AM	Tech: J. Horsley - A PC: J. Jarvis	

Structure ID: 4

P1 BX2424-08BAVF BOX BASE 8inW, 8inF, Variable Ht

P3) 23.5" - CASTING (cast in) - 4"	0 lb
P2) 24" x 24" - BX FLAT LID 8inW SPEC. (KY JB-B1) - 8"	922 lb
P1) 24" x 24" - BOX BASE 8inW, 8inF, Variable Ht - 22"	2372 lb
1) CASTING - HOE KY-206 F/C (KY TY1)	206 lb
1) 24" x 24" - Conseal CS-102 1.00"	0 lb
2) Hole - 20	0 lb
1) Hole - 18	0 lb
Structure Total:	3500 lb

Structure Notes: .
KYTC STATE PROJECT
1. HOE KY-206 F/C (KY TY1) PROVIDED BY ICAST.
2. KYTC JUNCTION BOX B1 / PER ASTM C913 SPEC'S.
3. CONCRETE = 4,000 PSI AT 28 DAYS.
4. TOP SLAB w KYTC TYPE 1 F/C CAST FLUSH.
5. REINFORCING PER ASTM A615 (GRADE 60).
- TOP SLAB (As. 62) #5 BARS AT 6" C.C.E.W.
- WALLS (As .31) #5 BARS AT 12" C.C.E.W.
- FLOOR (As .31) #5 BARS AT 12: C.C.E.W.

Rim: 568.1' Rim to Invert: 2.5' Slack: 0" Sump: 0" Step Position:

Position	Elev	Angle	Ext. (cw)	Pipe	Pipe OD	Connector	Hole	Horz Size	Up (_)	Offset
Invert 1	565.6'	90°	20"	15" HDPE	17.6"	Hole 20	20"	20"	-2.5"	0"
Invert 2	565.6'	180°	20"	15" HDPE	17.6"	Hole 20	20"	20"	-2.5"	0"
Invert 3	565.6'	270°	20"	12" HDPE	14.5"	Hole 18	18"	18"	-3"	0"
Invert 4										
Invert 5										
Invert 6										
Invert 7										
Invert 8										

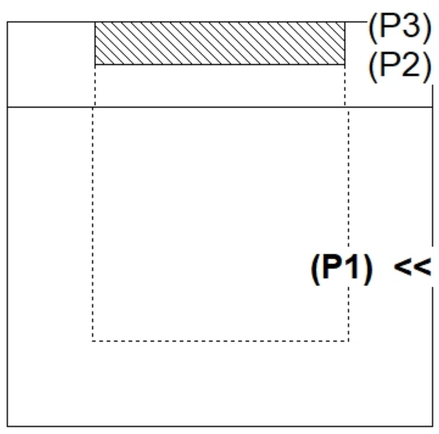

RIGHT-SIDE UP VIEW (int. dimensions)

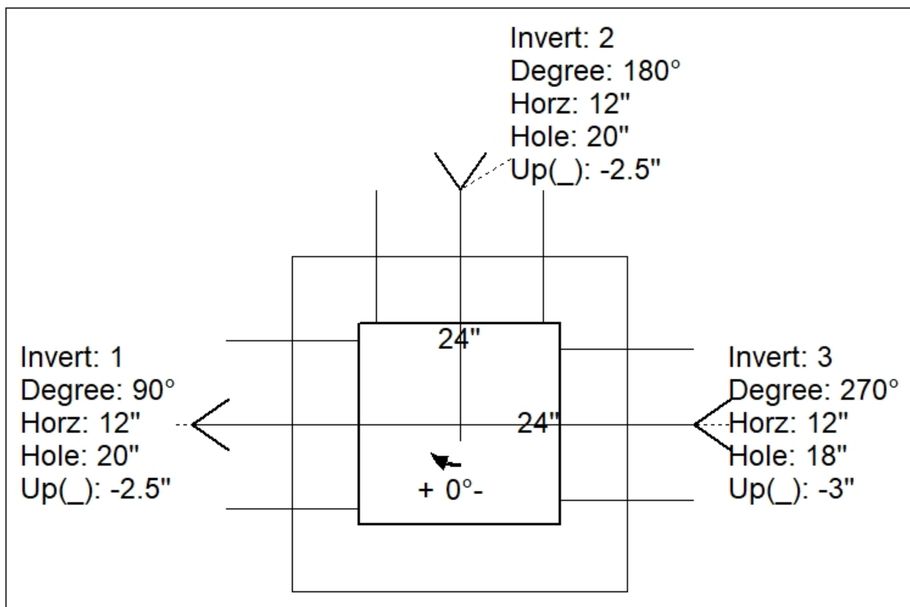

UPSIDE-DOWN VIEW (int. dimenions)

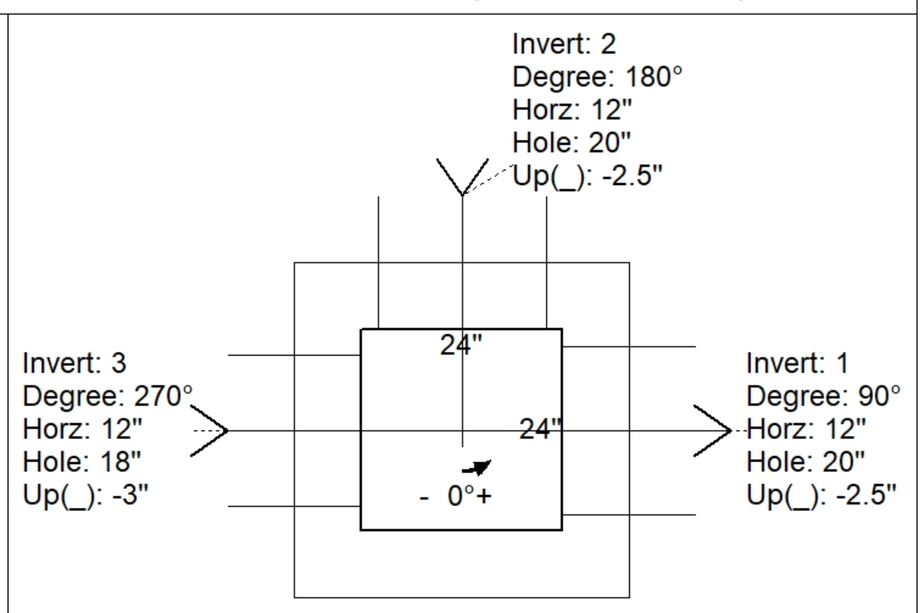

INSIDE WALL DIMENSIONS

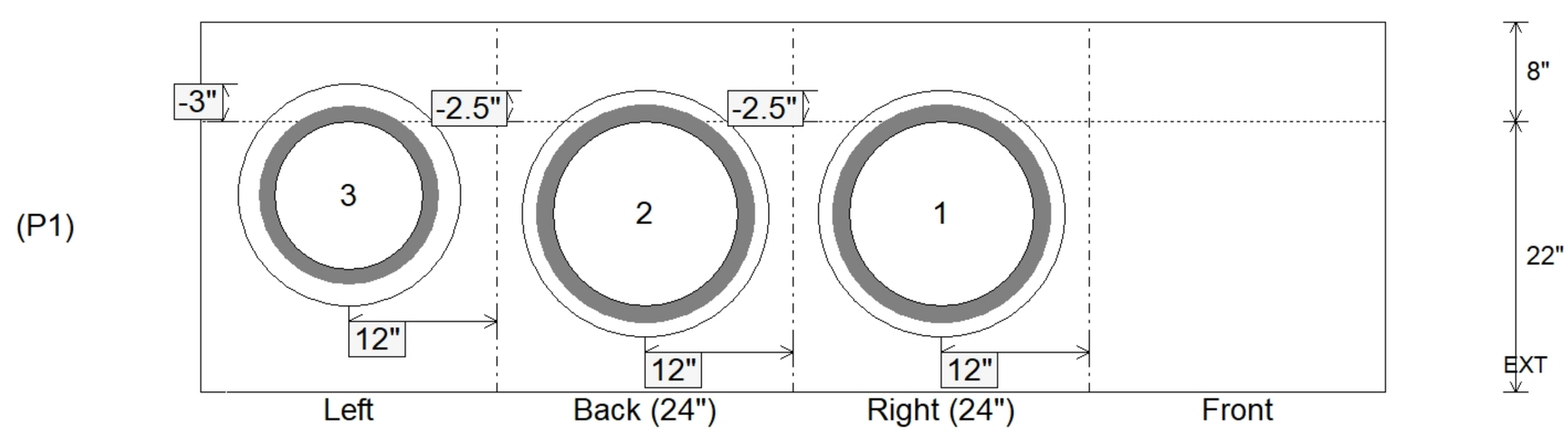

Coating (Int): Coating (Ext):	Seam Up: Flat Seam Dn: n/a	Wall Thickness: 8" Floor Height: 8"	Height (Int): 22" Height (Ext): 30"	Weight (Net): 2372 lb Volume (Net): 0.61cu.yd