Job Name: 25-2952 - KYTC Jefferson Co Call 106 (251315)
Job Location: Indiana, KY
Contractor: Louisville Paving and Construction

PC: J. Jarvis
TECH: J. Horsley - A
Plant: 100

Structure ID: **126**

Spec: KYTC	Rim: 566.72'	Sump: 2.5"	Floor (Bot): 561.762'
Type: MH A	Invert: 562.47'	Floor (Top): 562.262'	Overall Height: 4.917'
Size: 48"	Rim to Invert: 4.25'	Floor Height: 6"	Slack: 0.5"

Structure Notes:
KYTC STATE PROJECT
1. PER KYTC MANHOLE TYPE A / ASTM C-478 SPECS
2. CONCRETE: 4,000 PSI AT 28 DAYS
3. REINFORCEMENT:
   - FLAT LID: #4 BAR @ 10" C.C. E.W. (GRADE 60)
   - BASE: PER ASTM A615
4. NO STORM INVERT
5. STEPS AT 270 DEGREES
6. HOE KY-206 FRAME & COVER "STORM" SUPPLIED BY OTHERS

STRUCTURE SUMMARY:

P3) 24" - CASTING HEIGHT - 4"	0 lb
P2) 48" - MH FLAT LID w/24in ECC Hole F/G - 12"	1561 lb
P1) 48" - MH BASE Custom Ht T/n - 37"	3562 lb
1) 48" - Conseal CS-102 1.00"	0 lb
1) Hole - 20	0 lb
2) Hole - 18	0 lb
3) MH Step ML-10-TDS-NCR - 10"	0 lb
Structure Total:	5123 lb

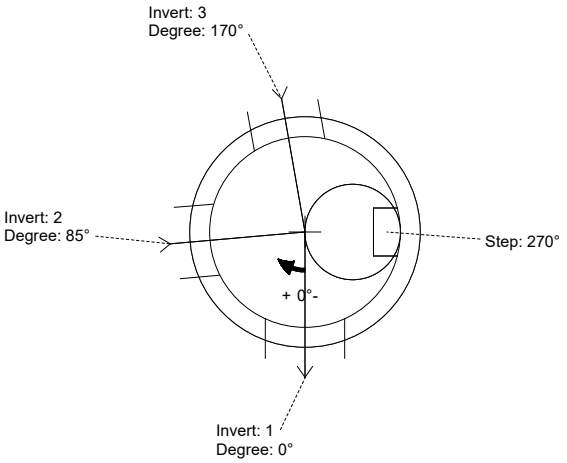

Position	Elev	Angle	Pipe	Pipe OD	Hole	Connector	Up (_)	Ref
Rim	566.72'							
Reducer								
Invert 1	562.47'	0°	15" HDPE	17.6"	20"	Hole 20	0"	P1
Invert 2	562.97'	85°	12" HDPE	14.5"	18"	Hole 18	5.5"	P1
Invert 3	562.72'	170°	12" HDPE	14.5"	18"	Hole 18	2.5"	P1
Invert 4								
Invert 5								
Invert 6								
Invert 7								
Invert 8								

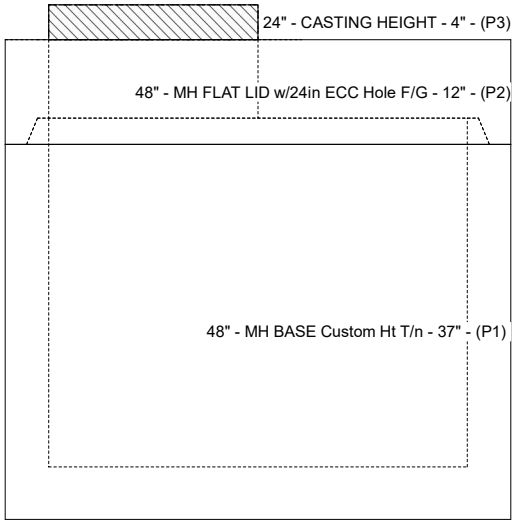

Cast (Int. Dim.) - Interior Dimensions

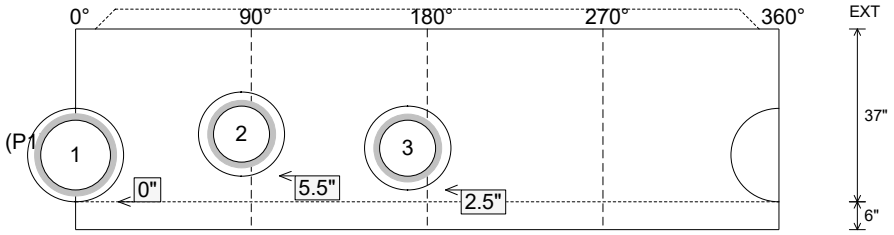

Submittal Drawing
5/12/2026 11:59:10 AM

SUBMITTAL
APPROVED BY: