Job Name: 25-2952 - KYTC Jefferson Co Call 106 (251315)
Job Location: Indiana, KY
Contractor: Louisville Paving and Construction

PC: J. Jarvis
TECH: J. Horsley - A
Plant: 100

Structure ID: **123**

Spec: KYTC	Rim: 566.52'	Sump: 3"	Floor (Bot): 561.02'
Type: MH A	Invert: 561.77'	Floor (Top): 561.52'	Overall Height: 5.5'
Size: 48"	Rim to Invert: 4.75'	Floor Height: 6"	Slack: 0"

Structure Notes:
KYTC STATE PROJECT
1. PER KYTC MANHOLE TYPE A / ASTM C-478 SPECS
2. CONCRETE: 4,000 PSI AT 28 DAYS
3. REINFORCEMENT:
   - FLAT LID: #4 BAR @ 10" C.C. E.W. (GRADE 60)
   - BASE: PER ASTM A615
4. NO STORM INVERT
5. STEPS AT 90 DEGREES
6. HOE KY-206 FRAME & COVER "STORM" SUPPLIED BY OTHERS

STRUCTURE SUMMARY:

P3) 24" - CASTING HEIGHT - 4"	0 lb
P2) 48" - MH FLAT LID w/24in ECC Hole F/G - 12"	1561 lb
P1) 48" - MH BASE Custom Ht T/n - 44"	4024 lb
1) 48" - Conseal CS-102 1.00"	0 lb
2) Hole - 20	0 lb
1) Hole - 18	0 lb
3) MH Step ML-10-TDS-NCR - 10"	0 lb
Structure Total:	5585 lb

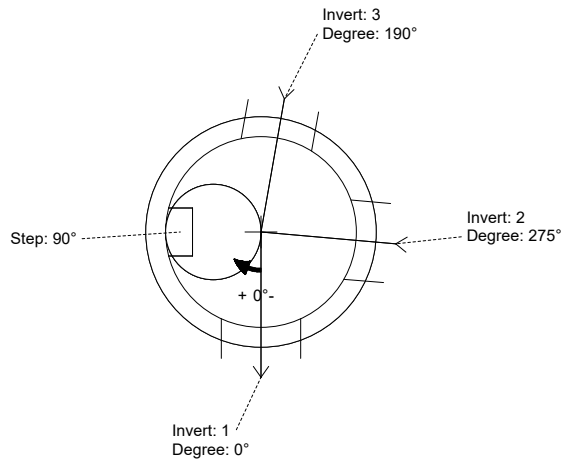

Position	Elev	Angle	Pipe	Pipe OD	Hole	Connector	Up (_)	Ref
Rim	566.52'							
Reducer								
Invert 1	561.77'	0°	15" HDPE	17.6"	20"	Hole 20	0.5"	P1
Invert 2	561.77'	275°	15" HDPE	17.6"	20"	Hole 20	0.5"	P1
Invert 3	561.77'	190°	12" HDPE	14.5"	18"	Hole 18	0"	P1
Invert 4								
Invert 5								
Invert 6								
Invert 7								
Invert 8								

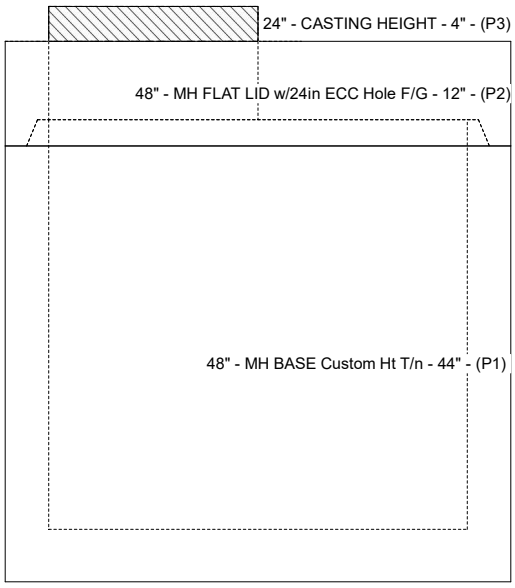

Cast (Int. Dim.) - Interior Dimensions

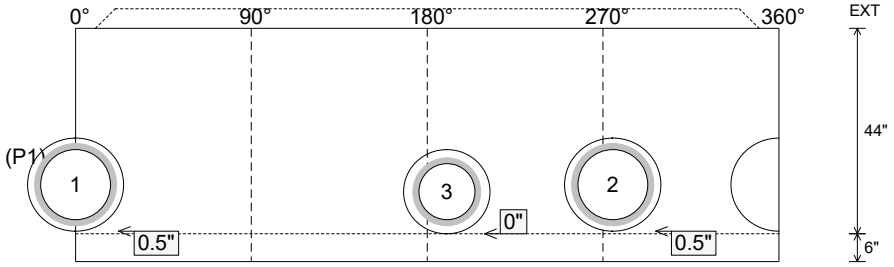

Submittal Drawing
5/12/2026 11:31:05 AM

SUBMITTAL
APPROVED BY: