Job Name: 25-2647 Nichols West

E. Brac
J. Cop
Plant: Beaver Dam

Job Location: Gallatin, TN

Structure ID: M1

Contractor: Hayes Pipe Supply

Spec: Storm Rim: 490.8' Top Slump: 3" Inlet (Bot): 485.
Type: STM MH Invert: 486.1' (Top) (Bot): 485.
Size: 48" Rim to Invert Floor Height: 6" Slack: 0.9"

Structure Notes:
1. (JBS 3300 SINGLE SET PER PLAN OTHERS)
2. PER ASTM C478

STRUCTURE SUMMARY:
P9) 28" x 28" - CASTING HEIGHT - 7.50" 70 lb
P8) 48" - MH FLAT TOP w/28"x28" Hole - 7" 1574 lb
P1) 48" - MH BASE Custom Ht - 44" 2574 lb
1) 48" - Conseal CS-102 1.00" 0 lb
1) 28" x 28" - Conseal CS-102 1.00" 0 lb
2) Hole - 34 0 lb
3) MH Step ML-10-TDS-NCR - 10" 0 lb

Structure Total: 4665 lb

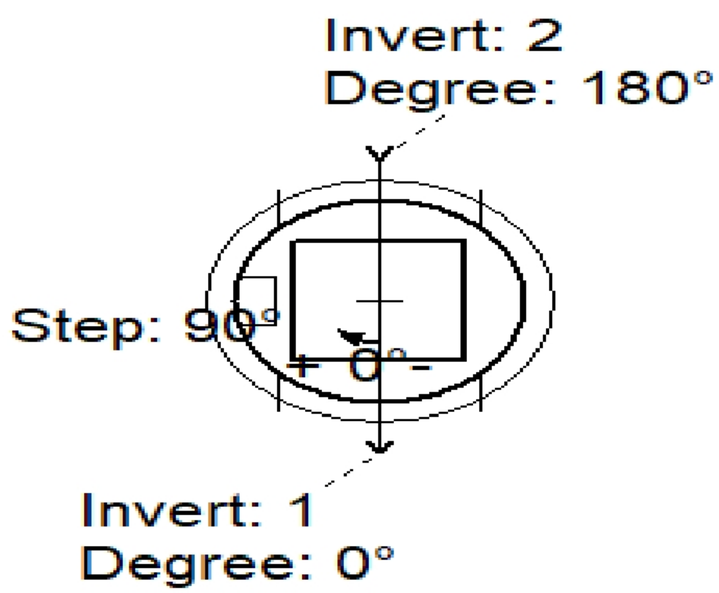

Position	Elev	Angle	Pipe	Pipe OD	Hole	Connector	Up (_)	Ref
Rim	490.8'							
Reducer								
Invert 1	486.1'	0°	24" RCP B WALL	30"	34"	Hole 34	0"	P1
Invert 2	486.4'	180°	24" RCP B WALL	30"	34"	Hole 34	3.6"	P1
Invert 3								
Invert 4								
Invert 5								
Invert 6								
Invert 7								
Invert 8								

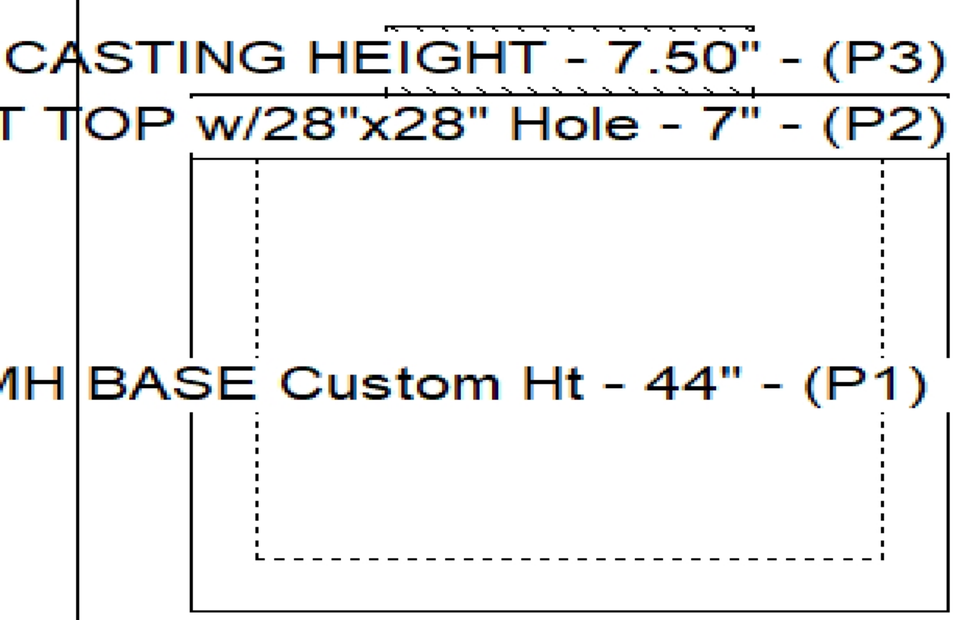

Default - Interior Dimensions

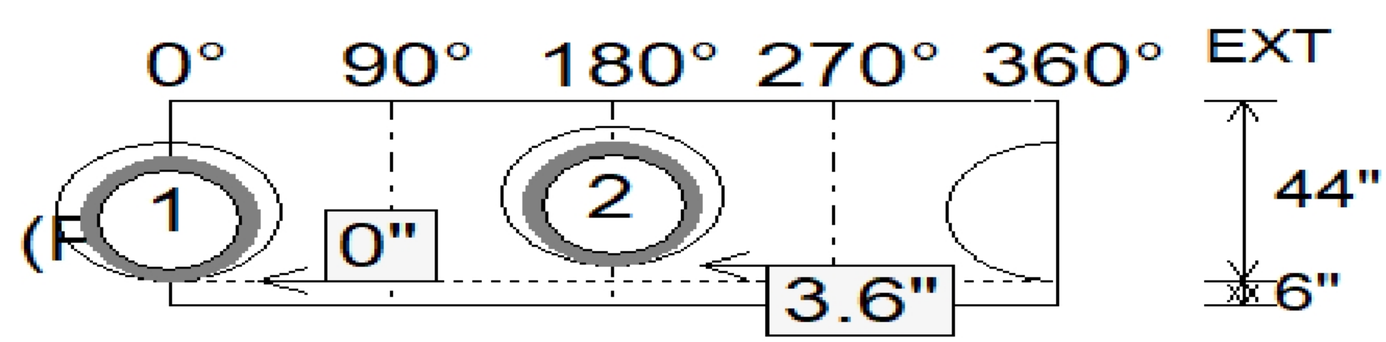

BY: