Job Name: 25-2647 Nichols West

E. Brac
J. Cop
Plant: Beaver Dam

Job Location: Gallatin, TN

Structure ID: D6

Contractor: Hayes Pipe Supply

Spec: Storm Rim: 519.9' Sump: 6" Top (Bot): 514.7
Type: SJM Mh Invert: 515.7 (Top) Total Height: 5.083
Size: 60" Rim to Invert: 4.2' Height: 8" Slack: 0.4

Structure Notes:
1. (JBS 4310 F/G
2. PER ASTM C478
SPECIFICATIONS.

STRUCTURE SUMMARY:

P3)	60" (x 90°) CASTING HEIGHT - 6"	69 lb
P2)	60" - MH FLAT TOP w/30"x30" Hole - 8"	1318 lb
P1)	60" - MH BASE Custom Ht - 39"	5547 lb
1)	60" - Conseal CS-102 1.00"	0 lb
1)	30" x 30" - Conseal CS-102 1.00"	0 lb
2)	Hole - 34	0 lb
1)	Hole - 22	0 lb
3)	MH Step ML-10-TDS-NCR - 10"	0 lb

Structure Total: 7887 lb

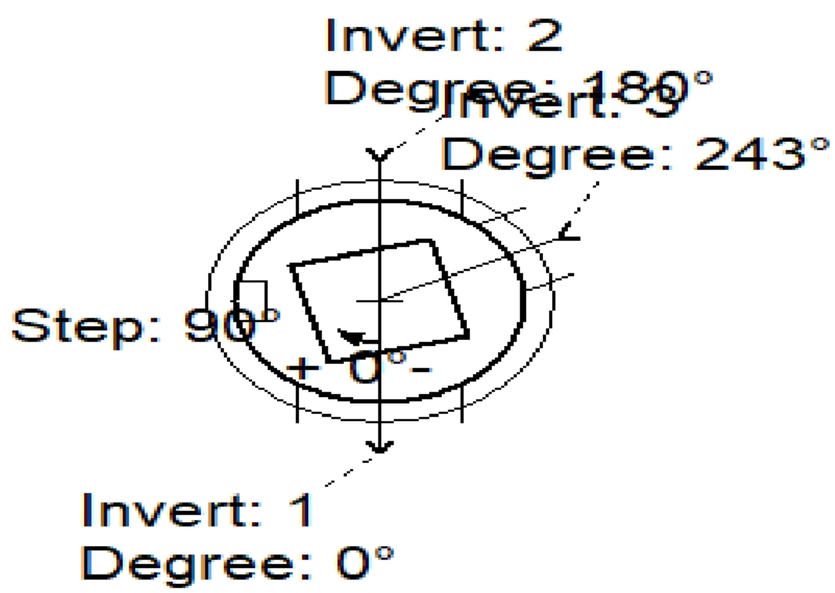

Position	Elev	Angle	Pipe	Pipe OD	Hole	Connection	Inv.	Ref
Rim	519.9'							
Reducer								
Invert 1	515.7'	0°	24" RCP B WALL	30"	34"	Hole 34	0"	P1
Invert 2	515.8'	180°	24" RCP B WALL	30"	34"	Hole 34	1.2"	P1
Invert 3	515.8'	243°	15" RCP B WALL	19.5"	22"	Hole 22	1.95"	P1
Invert 4								
Invert 5								
Invert 6								
Invert 7								
Invert 8								

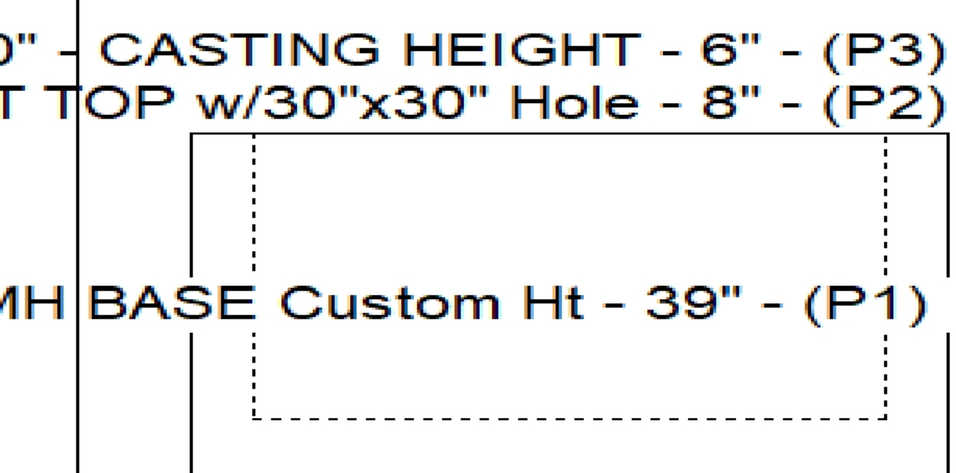

Default - Interior Dimensions

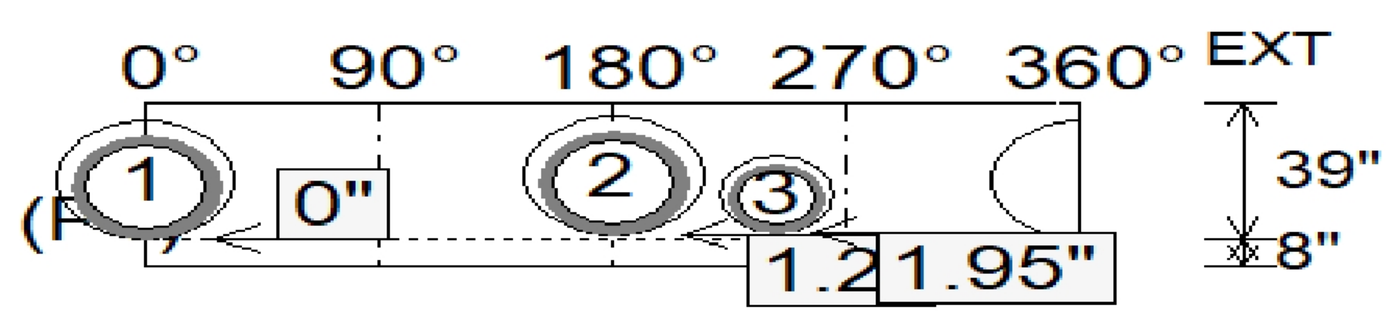

BY: