Job Name: 25-2647 Nichols West Job Location: Gallatin, TN Contractor: Hayes Pipe Supply	Plant: Beaver Dam 10/1/2026 10:33:11 AM	Tech: J. Coppage PC: E. Bradley	

Structure ID: D10

P1 MH048BAVF **MH BASE Custom Ht**

P3) 30" x 30" - CASTING HEIGHT - 6"	0 lb
P2) 48" - MH FLAT TOP w/30"x30" Hole - 7"	1264 lb
P1) 48" - MH BASE Custom Ht - 39"	3224 lb
1) 48" - Conseal CS-102 1.00"	0 lb
1) 30" x 30" - Conseal CS-102 1.00"	0 lb
2) Hole - 34	0 lb
3) MH Step ML-10-TDS-NCR - 10"	0 lb

Structure Total:	4488 lb

Structure Notes: .
1. (JBS 4310 F/G PROVIDED BY OTHERS)
2. PER ASTM C478 SPECIFICATIONS.
3. CONCRETE = 4,000 PSI AT 28 DAYS.
4. REINFORCING PER ASTM A615 (GRADE 60).
- TOP SLAB (As .62) #5 BARS AT 6" C.C.E.W..
- RISER/WALLS (As .12)
- FLOOR (As .31) #5 BARS AT 12" C.C.E.W.

Rim: 537.8' Rim to Invert: 4.1' Slack: 0.2" Sump: 3" Step Position: 90°

Position	Elev	Angle	Ext. (cw)	Pipe	Pipe OD	Connector	Hole	Horz Size	Up (_)	Offset
Invert 1	533.7'	0°	0"	24" RCP B WALL	30"	Hole 34	34"	37.782"	0"	0"
Invert 2	533.8'	180°	91.106"	24" RCP B WALL	30"	Hole 34	34"	37.782"	1.2"	0"
Invert 3										
Invert 4										
Invert 5										
Invert 6										
Invert 7										
Invert 8										

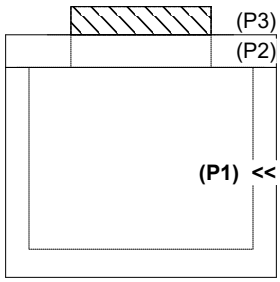

RIGHT-SIDE UP VIEW (int. dimensions)

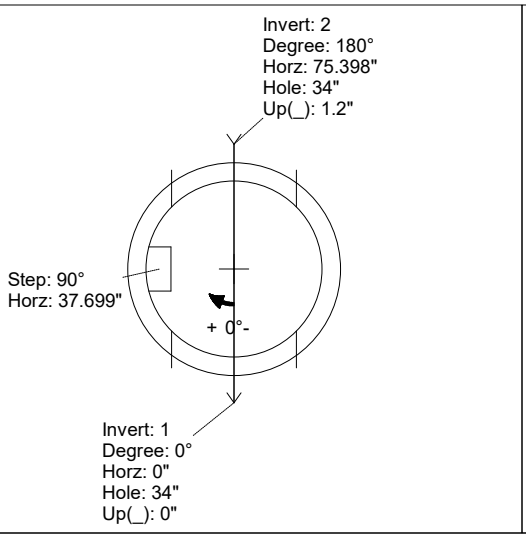

UPSIDE-DOWN VIEW (int. dimenions)

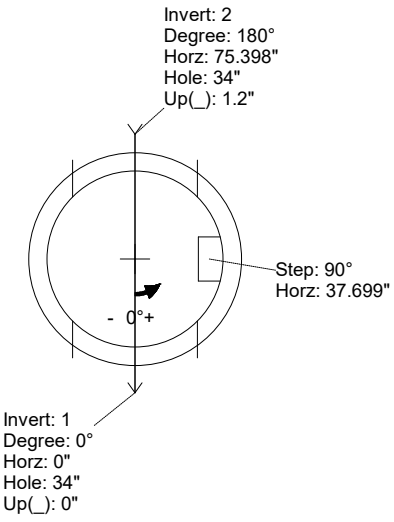

INSIDE WALL DIMENSIONS

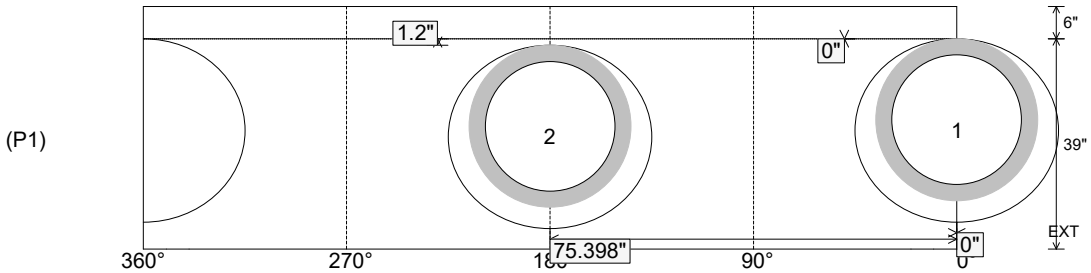

Coating (Int): Coating (Ext):	Seam Up: Flat Seam Dn: n/a	Wall Thickness: 5" Floor Height: 6"	Height (Int): 39" Height (Ext): 45"	Weight (Net): 3224 lb Volume (Net): 0.82cu.yd