Job Name: 25-2647 Nichols West
Job Location: Gallatin, TN
Contractor: Hayes Pipe Supply

PC: E. Bradley
TECH: J. Coppage
Plant: Beaver Dam

Structure ID: **C7**

Spec: Storm	Rim: 531.9'	Sump: 2.25"	Floor (Bot): 527.813'
Type: BX 6inW, 6inF	Invert: 528.5'	Floor (Top): 528.313'	Overall Height: 4.083'
Size: 28" x 28"	Rim to Invert: 3.4'	Floor Height: 6"	Slack: 0.05"

Structure Notes: .
1. (JBS 4310 F/G PROVIDED BY OTHERS)
2. PER ASTM C913 SPECIFICATIONS.
3. CONCRETE = 4,000 PSI AT 28 DAYS.
4. REINFORCING PER ASTM A615 (GRADE 60).
- WALLS (As .31) #5 BARS AT 12" C.C.E.W.
- FLOOR (As .31) #5 BARS AT 12" C.C.E.W.

STRUCTURE SUMMARY:

P2) 28" x 28" - CASTING HEIGHT - 6"	0 lb
P1) 28" x 28" - BOX BASE 6inW, 6inF, Variable Ht - 37"	2956 lb
1) 28" x 28" - Conseal CS-102 1.00"	0 lb
2) Hole - 22	0 lb
Structure Total:	2956 lb

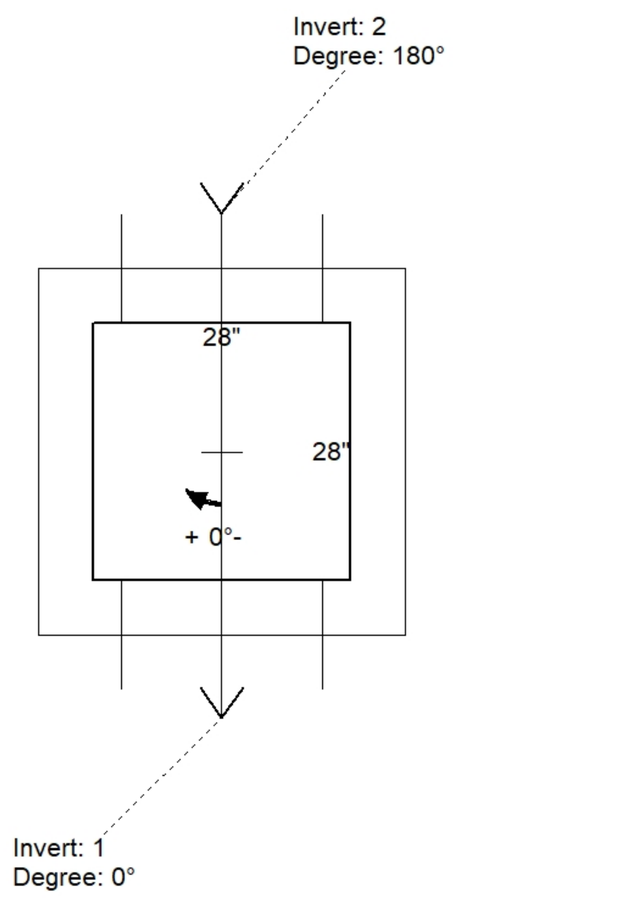

Position	Elev	Angle	Pipe	Pipe OD	Hole	Connector	Up (_)	Ref
Rim	531.9'							
Reducer								
Invert 1	528.5'	0°	15" RCP B WALL	19.5"	22"	Hole 22	0"	P1
Invert 2	528.6'	180°	15" RCP B WALL	19.5"	22"	Hole 22	1.2"	P1
Invert 3								
Invert 4								
Invert 5								
Invert 6								
Invert 7								
Invert 8								

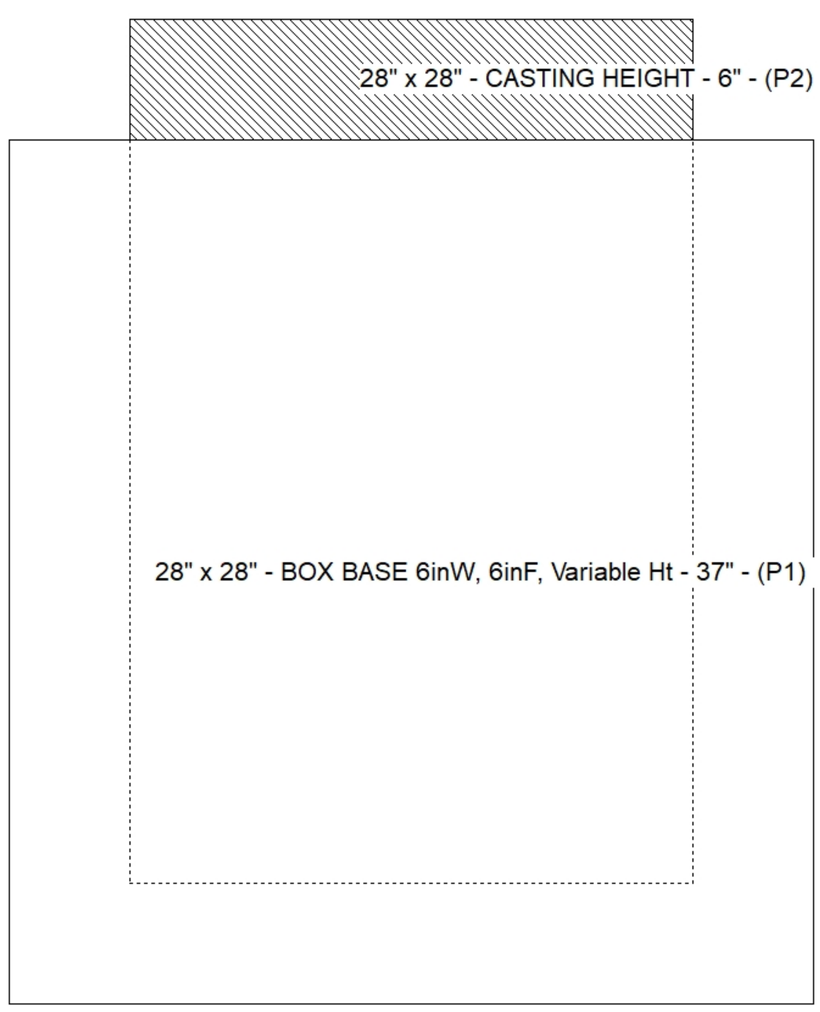

Default - Interior Dimensions

(P1)

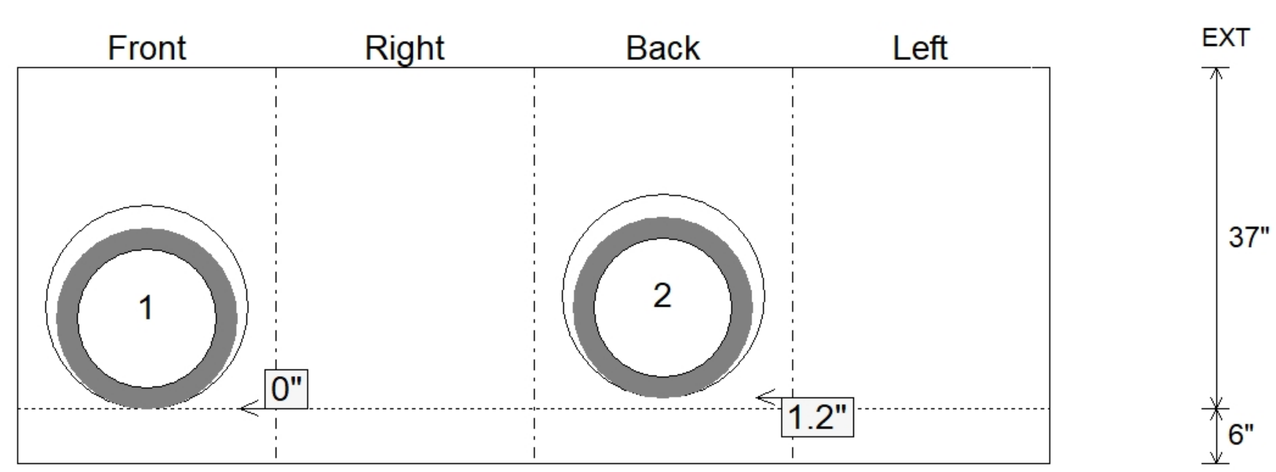

Submittal Drawing
10/5/2026 12:14:48 PM

SUBMITTAL
APPROVED BY: