Job Name: 25-2642 Muhlenberg Co Opportunity Center Job Location: Greenville, Ky Contractor: Hazex Construction Company, Inc	Plant: Beaver Dam 10/15/2025 9:57:01 AM	Tech: C.Russ PC: J.Jarvis	

Structure ID: A2

P1 HWSF15 15" - SLOPED & FLARED HEADWALL F/F

DIMENSIONS									
PIPE ø	A	B	C	D	E	F	G	H	I	WEIGHT
15"	2'-9"	3'-8"	2'-0"	1'-8"	4'-0"	3"	2½"	2'-0"	4'-9"	3,161 LBS.

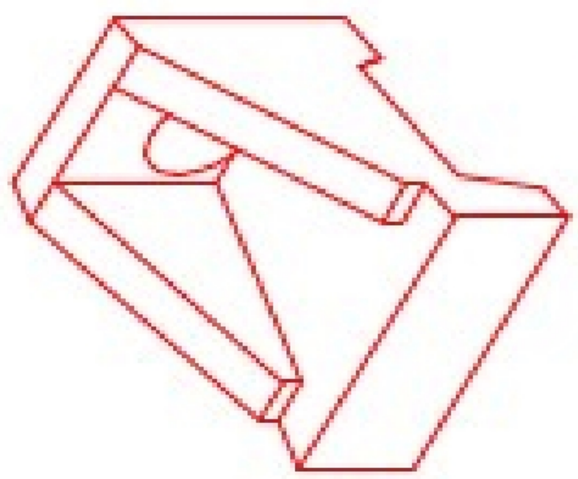

ISOMETRIC VIEW
15"ø HEADWALL

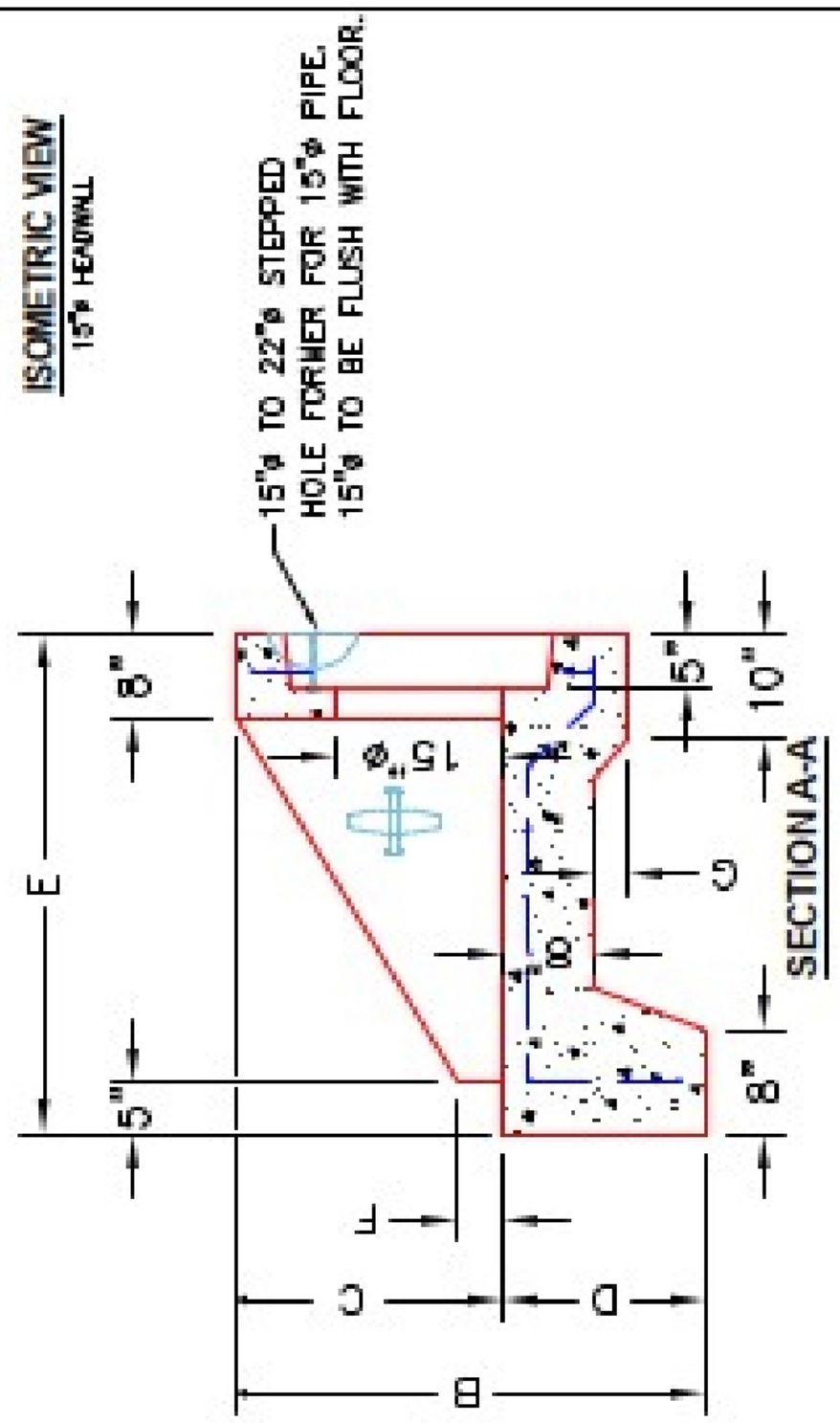

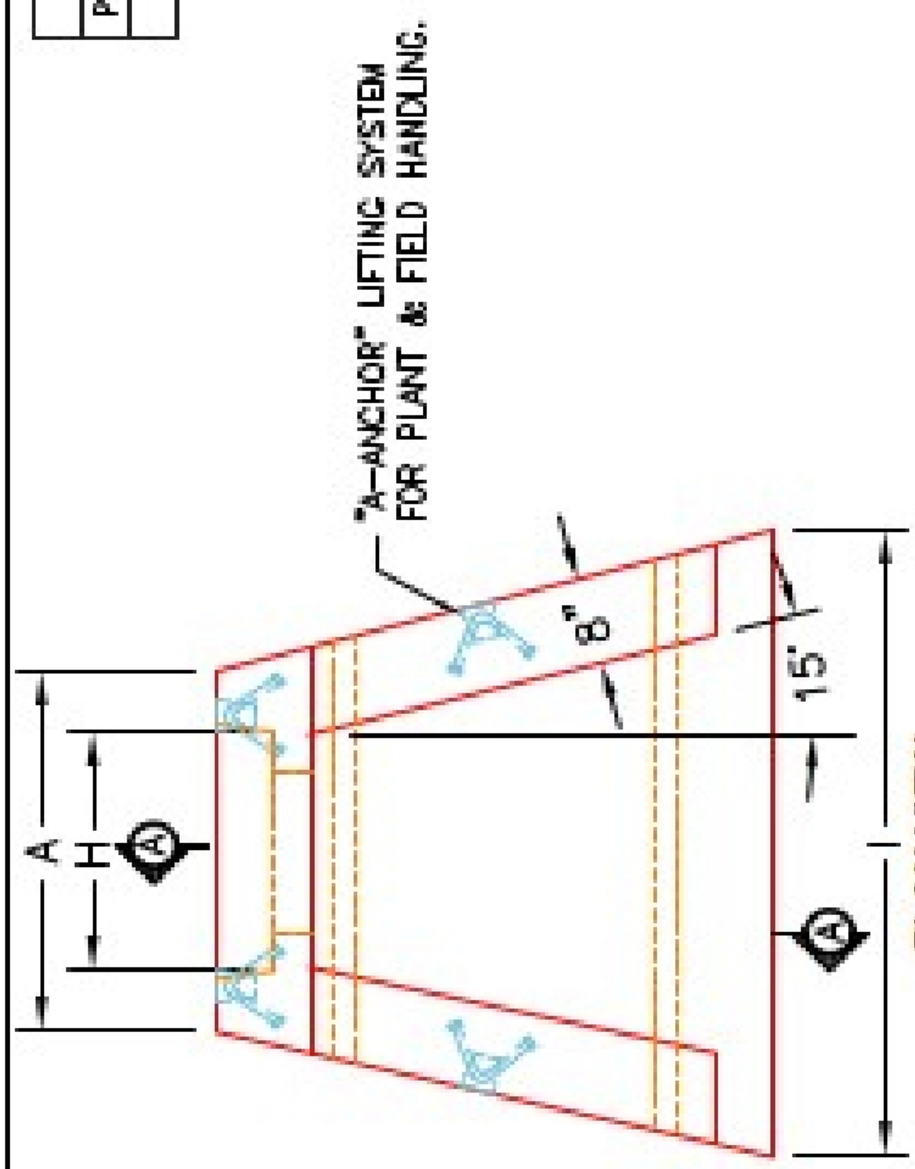

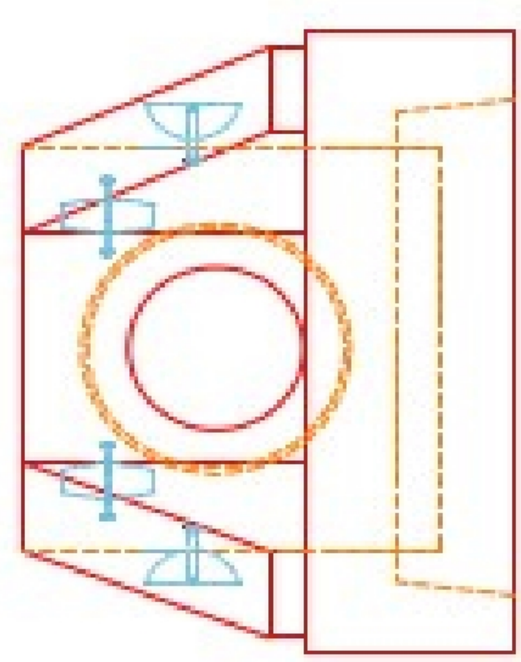

FRONT ELEVATION

NOTES:

1. CONCRETE 4500 PSI @ 28 DAYS.
2. REINFORCING #4 BAR @ 12" C/C E.W.—GRADE 60, (WITH 2" CONCRETE COVER MINIMUM)
3. REINFORCING BARS TO BE TACK WELDED OR TIED.
4. DRAWING TO BE USED IN CONJUNCTION WITH KYTC STD. DRAWING RDH-020-03 AND THE STANDARD SPECIFICATIONS FOR ROAD AND BRIDGE CONSTRUCTION.
5. ¾" CHAMFER ON ALL EXPOSED EDGES.

PRODUCT I.D.: HWSF15	DESCRIPTION: KYTC 15"ø SLOPED & FLARED HEADWALL
PRODUCT VIEW: RIGHT SIDE UP	CUSTOMER: STOCK
PLANT: BEAVER DAM, KY.	PROJECT: STOCK INVENTORY
WEIGHT: 3,161 LBS.	STRUCTURE ID.: N/A
TOP SECTION JOINT: N/A	QUOTE/SALES ORDER NO: N/A
BASE SECTION JOINT: N/A	CHECK: J.H. ROSS, PE / DRAWING: N. RICHARDS
QC CHECK INITIALS:	DATE: 09/15/22 / SCALE: NTS / PG. 1 of 1

PRODUCTION WORK ORDER

QUALITY CONTROL CHECKLIST

- ☐ ALL DIMENSIONS CORRECT.
- ☐ LIFTERS INSTALLED.
- ☐ STEPPED HF CORRECT SIZE.
- ☐ REINFORCING CORRECT.
- ☐ DISSIPATOR BLOCK INSTALLED.
- ☐ EDGES CHAMFERED.
- ☐ ALL PATCHWORK ACCEPTABLE.

THIS DRAWING IS THE PROPERTY OF INFRASTRUCTURE PRECAST, INC. ANY USE OR DUPLICATION OF THIS DRAWING WITHOUT PRIOR AUTHORIZATION IS STRICTLY PROHIBITED.