Job Name: 25-2541 - Wartrace Creek Interceptor
Job Location: Springfield, TN 37172
Contractor: Cumberland Pipeline LLC

PC: E. Bradley
TECH: C. Russ
Plant: Beaver Dam, KY

Structure ID: **SF-105 Remake**

Spec: Sanitary	Rim: 607.36'	Sump: 2"	Floor (Bot): 590.563'
Type: SAN.MH w/Xypex	Invert: 591.23'	Floor (Top): 591.063'	Overall Height: 16.75'
Size: 48"	Rim to Invert: 16.13'	Floor Height: 6"	Slack: 0.56"

Structure Notes: 1. PER ASTM C478 SPECIFICATIONS.
2. CONCRETE = 4,000 PSI AT 28 DAYS.
3. JBS 1155 "SANITARY" PROVIDED BY ICAST.
4. INSIDE DROP ASSEMBLY BY OTHERS.
5. NO STEPS
REINFORCING PER ASTM A615 (GRADE 60).
- CONE (As .12)
- RISER (As .12)
- FLOOR (As .31) #5 BARS AT 12" C.C.E.W.

STRUCTURE SUMMARY:

P5) 24" - CASTING HEIGHT - 6"	0 lb
P4) 48" - ECC XYPEX CONE w/ 24" HOLE - 36"	2251 lb
P3) 48" - MH RISER w/XYPEX - 36"	2515 lb
P2) 48" - MH RISER w/XYPEX SPECIAL - 72"	4982 lb
P1) 48" - MH BASE Custom Ht, w/XYPEX - 45"	3969 lb
1) 48" - MH INVERT CHANNEL w/XYPEX - FULL HEIGHT	1440 lb
1) JOINT WRAP - 0.065"x6"x50' CONSEAL CS212	0 lb
1) JOINT WRAP PRIMER - CONSEAL CS-75 (1 gal.)	0 lb
3) 48" - DBL 1"x14.5' Butyl (2x)	0 lb
2) A-Lok - 0820	2 lb
1) PSX - 12-08 NYLO	8 lb
Structure Total:	15167 lb

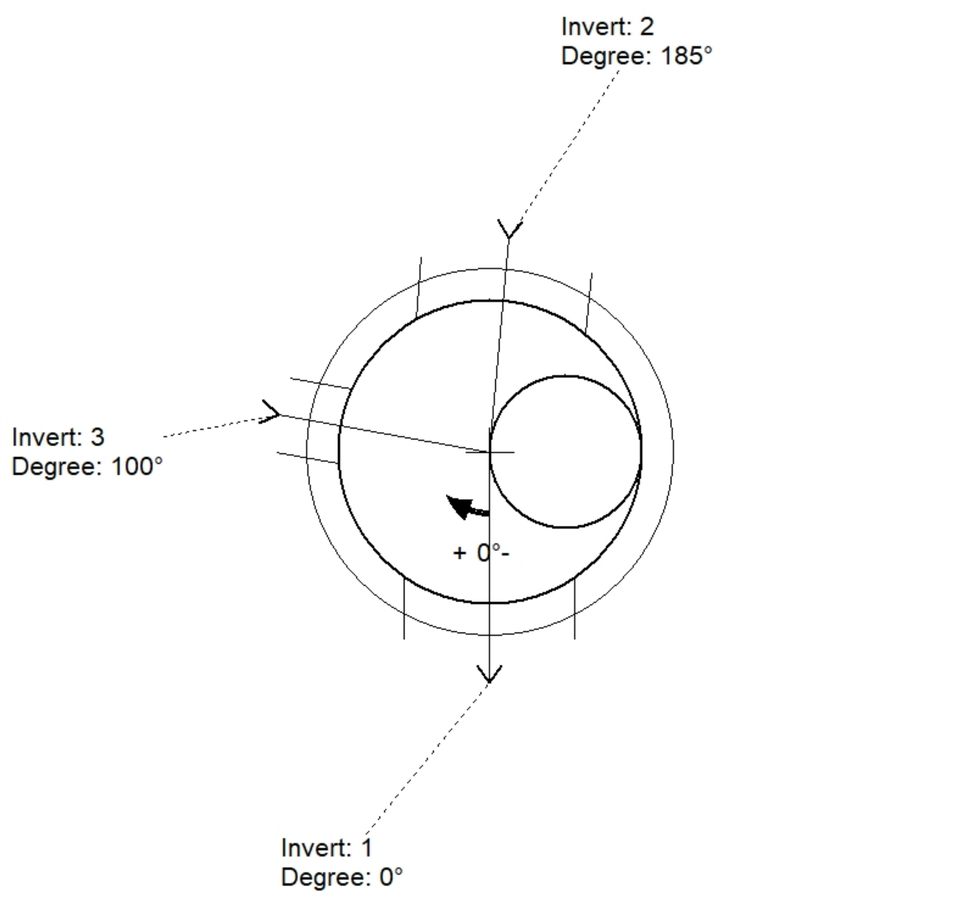

Position	Elev	Angle	Pipe	Pipe OD	Hole	Connector	Up (_)	Ref
Rim	607.36'							
Reducer								
Invert 1	591.23'	0°	24" DI	25.75"	27"	A-Lok 0820	0.5"	P1
Invert 2	591.23'	185°	24" DI	25.75"	27"	A-Lok 0820	0.5"	P1
Invert 3	599.22'	100°	8" PVC SDR35	8.5"	12"	PSX 12-08 NYLO	46.63"	P2
Invert 4								
Invert 5								
Invert 6								
Invert 7								
Invert 8								

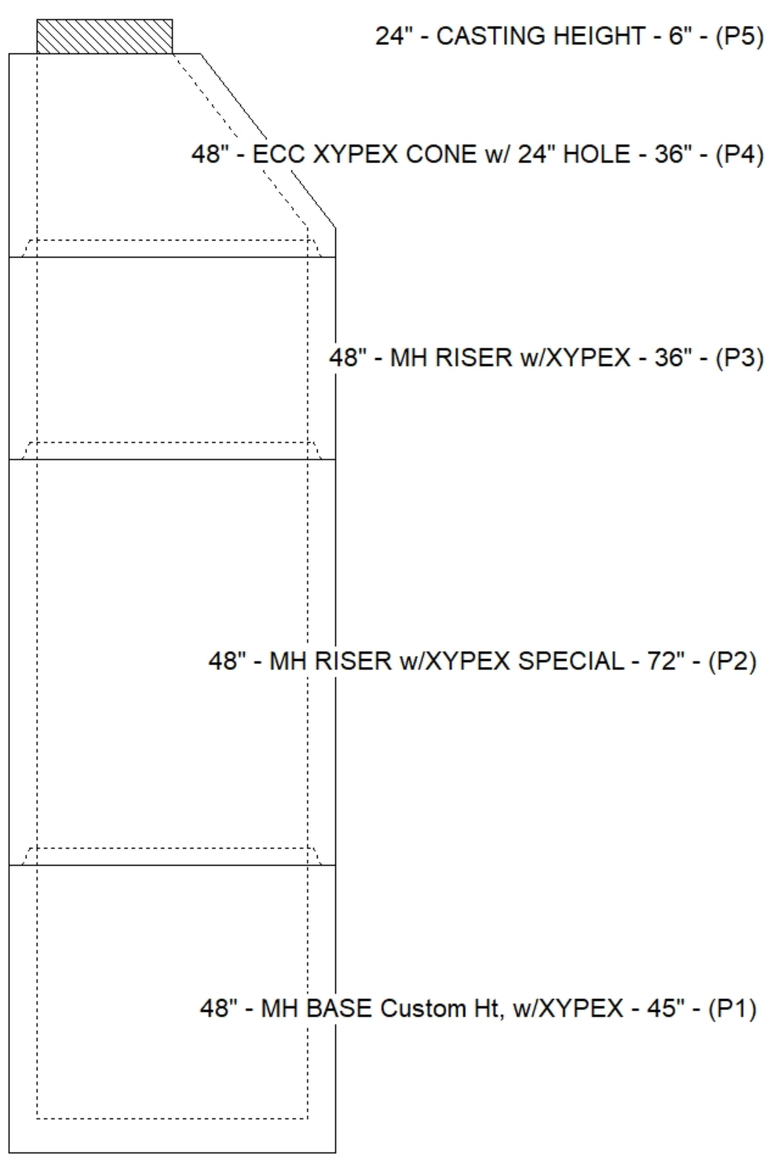

Default - Interior Dimensions

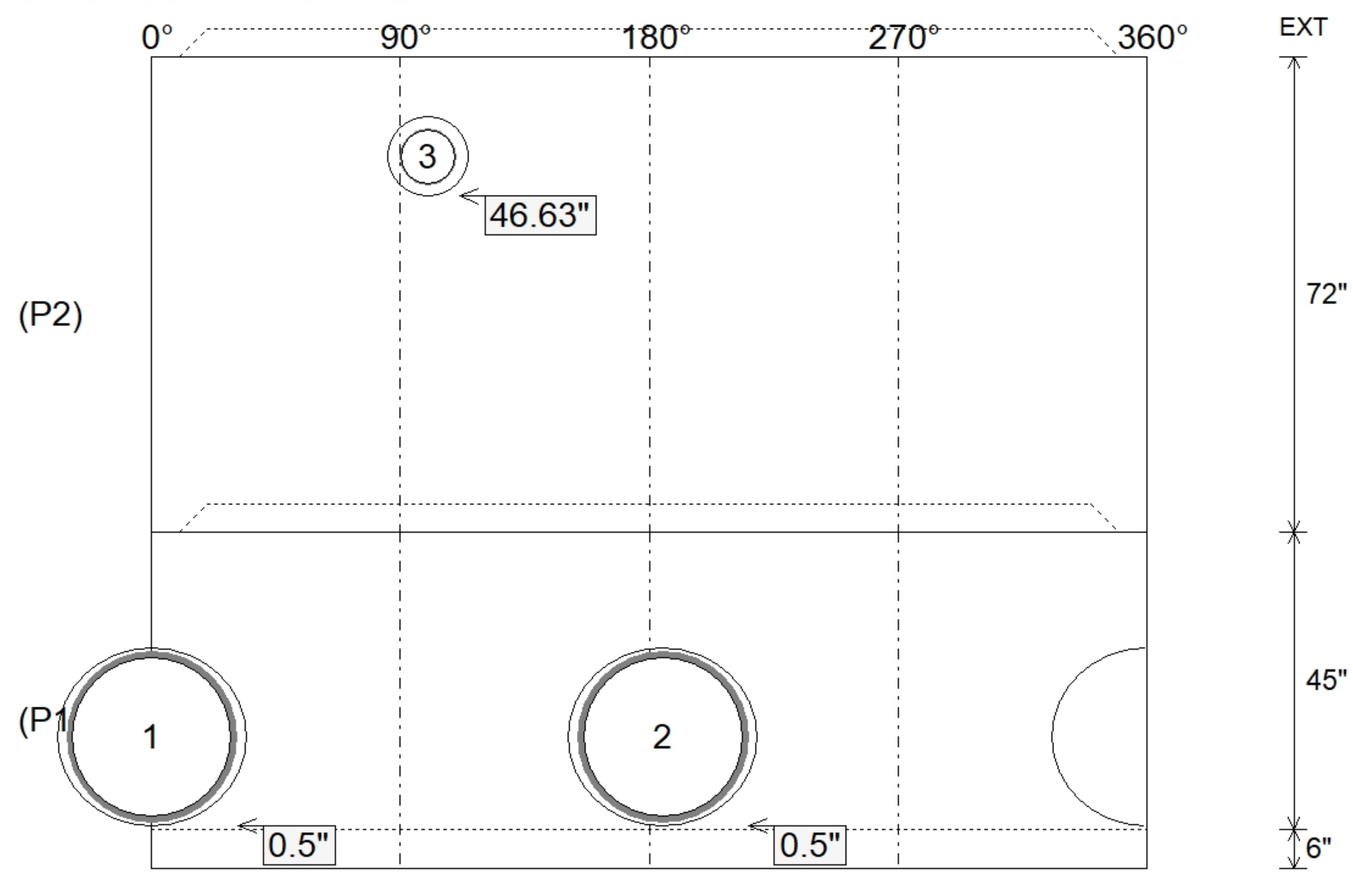

Submittal Drawing
7/20/2026 10:49:55 AM

SUBMITTAL
APPROVED BY: