Job Name: 25-2471 - Texas Roadhouse Job Location: Danville, KY Contractor: McCain Bros Excavating LLC	Plant: 100 6/12/2026 5:44:49 PM	Tech: Jared - F PC: M. Sullivan	

Structure ID: DISTILLERY FIRE VAULT

P2 BX084180-08LD08S **BX FLAT TOP 8"W w/36"x36" HATCH F/F**

P3) 36" x 36" - HATCH (CAST FLUSH) - 3"	100 lb
P2) 84" x 180" - BX FLAT TOP 8"W w/36"x36" HATCH F/F - 8"	12287 lb
P1) 84" x 180" - BOX BASE 8inW, 8inF, Variable Ht F/n - 72"	40013 lb
1) HATCH (Alum.) - HALLIDAY W1S 36"x36"	78 lb
1) 36" x 36" - Conseal CS-102 1.00" (Double)	0 lb
4) Hole - 10	0 lb

Structure Total:	52479 lb

Structure Notes: .
1. PER ASTM C913 SPECIFICATIONS.
2. CONCRETE = 4,000 PSI AT 28 DAYS..
3. CASTING SUPPLIED BY ICAST (HALLIDAY W1S 36"x36")
4. LINK-SEAL CONNECTORS TO BE SUPPLIED BY OTHERS.
5. AL LADDER/POST TO BE SUPPLIED BY ICAST.

.

REINFORCING PER ASTM A615 (GRADE 60).
- TOP SLAB (As .62) #5 BARS AT 6" C.C.E.W..
- RISER/WALLS (As .37) #5 BARS AT 8" C.C.E.W.
- FLOOR (As .37) #5 BARS AT 8" C.C.E.W.

NOTES:
1. PER ASTM C913 LATEST REVISION
2. CONCRETE: 4,000 PSI AT 28 DAYS.
3. REINFORCEMENT: #5 BAR @ 6" C.C.E.W. PER ASTM A615 (GRADE 60)
4. JOINT SEALANT – 1" CS–102–DOUBLE
5. HATCH: W1S 36"X36" HATCH IS PROVIDED BY ICAST.
6. HATCH TO BE CAST INTO TOP SLAB.

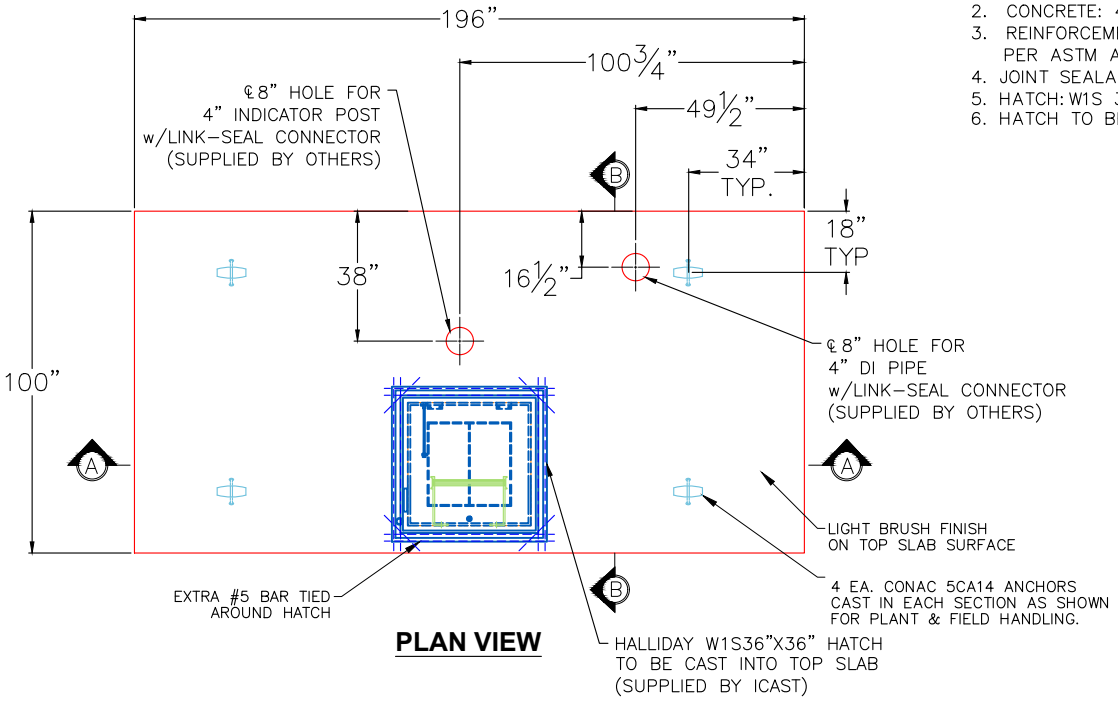

PLAN VIEW

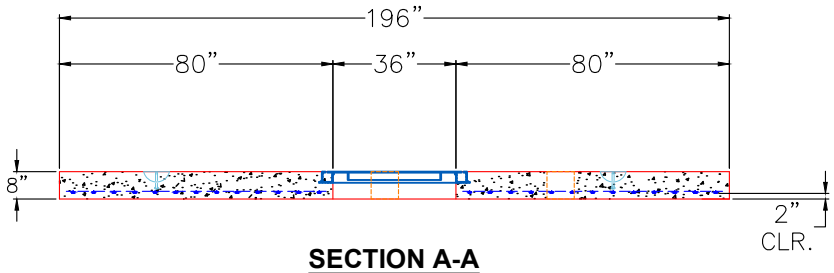

SECTION A-A
(RIGHT SIDE–UP VIEW)

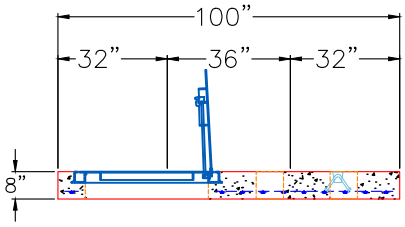

SECTION B-B
(RIGHT SIDE–UP VIEW)

Coating (Int): Coating (Ext):	Seam Up: Flat Seam Dn: Flat	Wall Thickness: 8"	Height (Ext): 8"	Weight (Net): 12287 lb Volume (Net): 3.14cu.yd