Job Name: 25-2471 - Texas Roadhouse Job Location: Danville, KY Contractor: McCain Bros Excavating LLC	Plant: 100 6/11/2026 11:35:19 AM	Tech: Jared - F PC: M. Sullivan	

Structure ID: 2

P1 MH072BA48 MH BASE T/n

P4) 24" - CASTING HEIGHT - 7"	0 lb
P3) 72" - MH FLAT LID w/24in ECC Hole F/G - 15"	5098 lb
P2) 72" - MH RISER T/G - 48"	6997 lb
P1) 72" - MH BASE T/n - 48"	9349 lb
2) 72" - Conseal CS-102 1.00"	0 lb
1) 24" - Conseal CS-102 1.00"	0 lb
2) Hole - 30	0 lb
1) Hole - 38	0 lb
8) MH Step ML-10-TDS-NCR - 10"	0 lb
Structure Total:	21444 lb

Structure Notes: .
1. PER ASTM C478 SPECIFICATIONS.
2. CONCRETE = 4,000 PSI AT 28 DAYS.
3. NO INVERT CHANNEL.
4. (7" TALL CASTING BY OTHERS)
5. (ORIFICE PLATE BY OTHERS)

.
REINFORCING PER ASTM A615 (GRADE 60).
- TOP SLAB (As .62) #5 BARS AT 6" C.C.E.W..
- RISER/WALLS (As .18)
- FLOOR (As .37) #5 BARS AT 10" C.C.E.W.

Rim: 1036.4' Rim to Invert: 9.9' Slack: 0.8" Sump: 0" Step Position: 90°

Position	Elev	Angle	Ext. (cw)	Pipe	Pipe OD	Connector	Hole	Horz Size	Up (_)	Offset
Invert 1	1026.5'	0°	0"	24" HDPE	27.8"	Hole 30	30"	30.944"	-1.875"	0"
Invert 2	1026.5'	180°	135.125"	30" HDPE	35.1"	Hole 38	38"	40.031"	-2.5"	0"
Invert 3	1026.5'	270°	202.625"	24" HDPE	27.8"	Hole 30	30"	30.944"	-1.875"	0"
Invert 4										
Invert 5										
Invert 6										
Invert 7										
Invert 8										

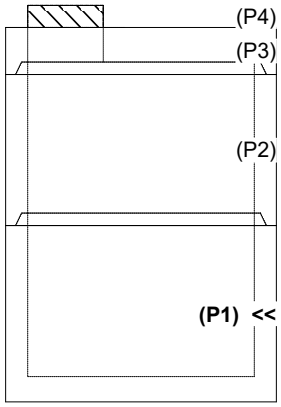

RIGHT-SIDE UP VIEW (int. dimensions)

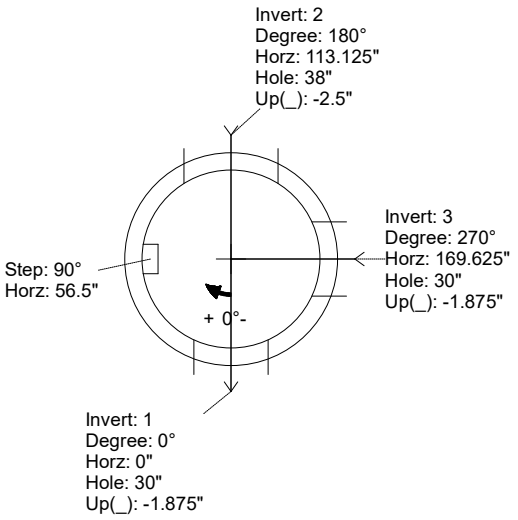

UPSIDE-DOWN VIEW (int. dimenions)

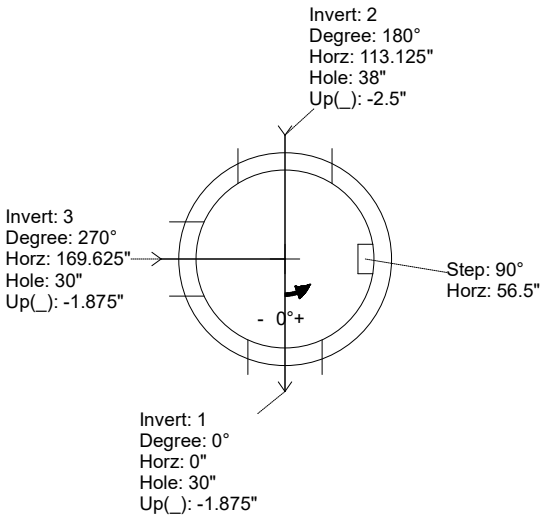

INSIDE WALL DIMENSIONS

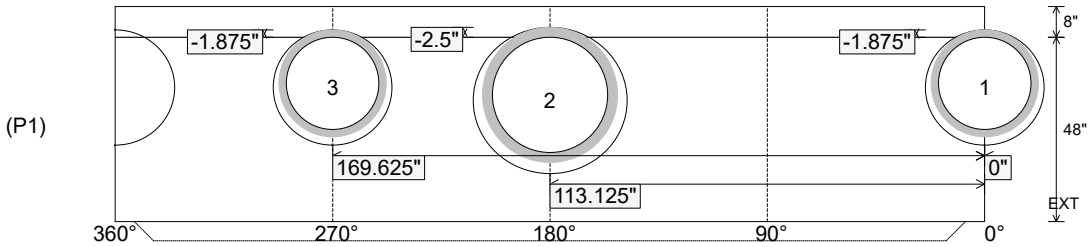

Coating (Int): Coating (Ext):	Seam Up: Tongue Seam Dn: n/a	Wall Thickness: 7" Floor Height: 8"	Height (Int): 48" Height (Ext): 56"	Weight (Net): 9349 lb Volume (Net): 2.39cu.yd