Job Name: 25-2471 - Texas Roadhouse Job Location: Danville, KY Contractor: McCain Bros Excavating LLC	Plant: 100 6/16/2026 8:14:17 AM	Tech: Jared - F PC: M. Sullivan	

Structure ID: 1

P6 GR4 **GRADE RING**

P7) 24" - CASTING HEIGHT - 7"	0 lb
P6) 24" - GRADE RING - 4"	270 lb
P5) 48" - ECC CONE w/ 24" HOLE - 24"	1550 lb
P4) 48" - MH RISER - 24"	1677 lb
P3) 60" - MH Transition Slab 48" Hole - 13"	1928 lb
P2) 60" - MH RISER SPECIAL - 72"	5413 lb
P1) 60" - P.I.P. BY OTHERS - BTM SLAB - 0"	0 lb
2) 60" - Conseal CS-202 1.00"	0 lb
2) 48" - Conseal CS-202 1.00"	0 lb
2) DOGHOUSE - 40"x42"	0 lb
1) Hole - 30	0 lb
10) MH Step ML-10-TDS-NCR - 10"	0 lb
Structure Total:	10838 lb

Structure Notes: .
1. PER ASTM C478 SPECIFICATIONS.
2. CONCRETE = 4,000 PSI AT 28 DAYS.
3. NO INVERT CHANNEL.
4. (7" TALL CASTING BY OTHERS)

.
REINFORCING PER ASTM A615 (GRADE 60).
- CONE (As .12).
- RISER/WALLS (As .12)
- TRANS. SLAB (As .62) #5 BARS AT 6" C.C.E.W.
- RISER/WALLS (As .18)

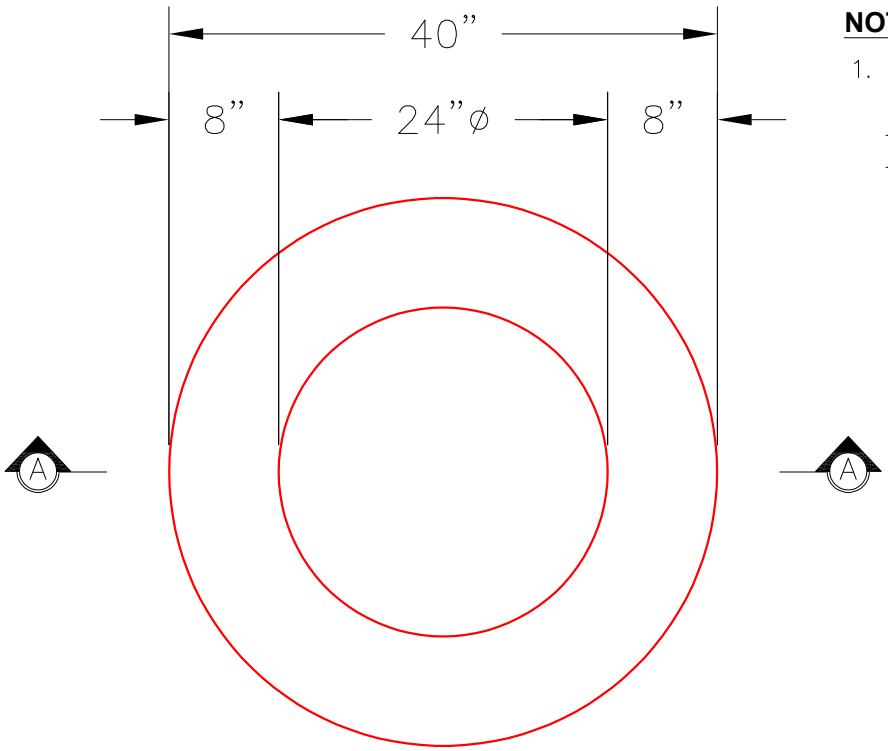

PLAN VIEW

NOTES:

1. GRADE RINGS MEET OR EXCEED THE FOLLOWING SPECIFICATIONS:
   - CONCRETE: 4,000 PSI @ 28 DAYS.
   - REINFORCING: (1) #3 HOOP CENTERED (GRADE 60)

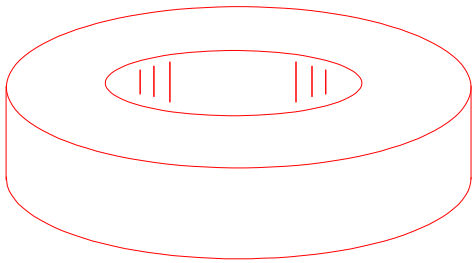

ISOMETRIC VIEW

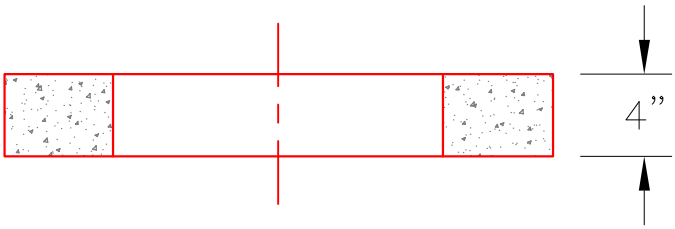

SECTION A-A

Coating (Int): Coating (Ext):	Seam Up: Flat Seam Dn: Flat	Wall Thickness: 8"	Height (Ext): 4"	Weight (Net): 270 lb Volume (Net): 0.07cu.yd