Job Name: 25-2422 - Woodland Springs Section 3 (Sanitary)
Job Location: Clarksville, TN
Contractor: Byard Construction, LLC

PC: A. Chambers
TECH: Jared - A
Plant: 100

Structure ID: **B-1**

Spec: Sanitary	Rim: 427.83'	Sump: 2"	Floor (Bot): 418.033'
Type: SAN.MH w/ConBlock-CDA Red	Invert: 418.7'	Floor (Top): 418.533'	Overall Height: 9.75'
Size: 48"	Rim to Invert: 9.13'	Floor Height: 6"	Slack: 0.56"

Structure Notes:
1. PER ASTM C-478 SPECIFICATIONS
2. CONCRETE: 4,000 PSI AT 28 DAYS
3. REINFORCEMENT: PER ASTM A615
4. INVERT CHANNEL REQUIRED
5. CONBLOCK CDA RED ADMIXTURE REQUIRED
6. STEPS AT 90 DEGREES
7. JBS 1155 FRAME & COVER "SANITARY" SUPPLIED BY ICAST

STRUCTURE SUMMARY:

P5) 24" - CASTING HEIGHT - 6"	0 lb
P4) 24" - GRADE RING w/ConBlock-CDA Red F/F - 3"	202 lb
P3) 48" - ECC CONE w/ 24" HOLE, w/ConBlock-CDA Red F/G - 30"	1961 lb
P2) 48" - MH RISER w/ConBlock-CDA Red T/G - 48"	3353 lb
P1) 48" - MH BASE w/ConBlock-CDA Red T/n - 24"	2911 lb
1) 48" - MH INVERT CHANNEL w/ConBlock-CDA Red - FULL HEIGHT	1440 lb
1) JOINT WRAP - 0.065"x6"x50' CONSEAL CS212	0 lb
1) JOINT WRAP PRIMER - CONSEAL CS-75 (1 gal.)	0 lb
1) ADMIXTURE CONBLOCK CDA RED	0 lb
1) CASTING - JBS 1155 F/C SANITARY	250 lb
2) 48" - Conseal CS-102 1.00" (Double)	0 lb
1) 24" - Conseal CS-102 1.00" (Double)	0 lb
2) PSX - 12-08 NYLO	16 lb
9) MH Step ML-10-TDS-NCR - 10"	0 lb
Structure Total:	10134 lb

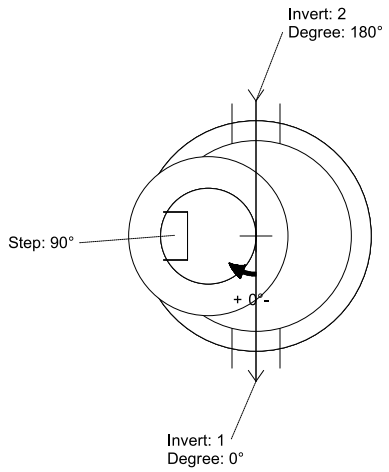

Position	Elev	Angle	Pipe	Pipe OD	Hole	Connector	Up (_)	Ref
Rim	427.83'							
Reducer								
Invert 1	418.7'	0°	8" PVC SDR35	8.5"	12"	PSX 12-08 NYLO	0"	P1
Invert 2	418.8'	180°	8" PVC SDR35	8.5"	12"	PSX 12-08 NYLO	1.25"	P1
Invert 3								
Invert 4								
Invert 5								
Invert 6								
Invert 7								
Invert 8								

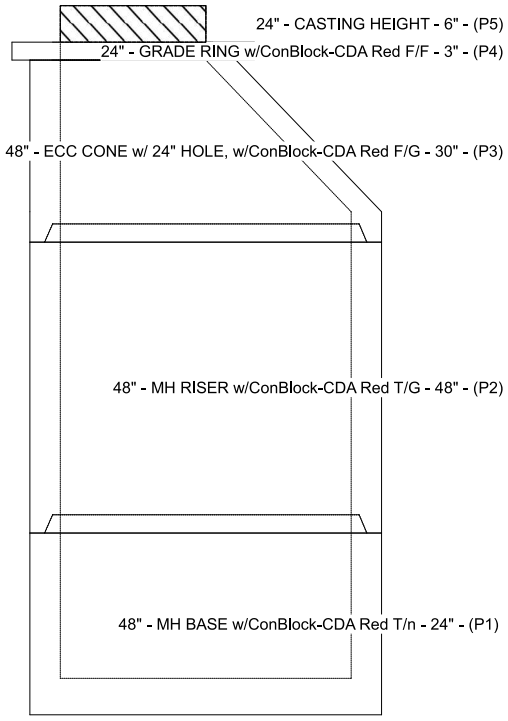

Cast (Int. Dim.) - Interior Dimensions

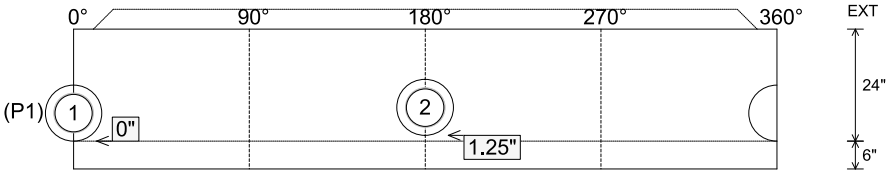

Submittal Drawing
5/14/2026 11:43:05 AM

SUBMITTAL
APPROVED BY: