Job Name: 25-2422 - Woodland Springs Section 3 (Sanitary)
Job Location: Clarksville, TN
Contractor: Byard Construction, LLC

PC: A. Chambers
TECH: Jared - A
Plant: 100

Structure ID: **A-3**

Spec: Sanitary	Rim: 429.93'	Sump: 2"	Floor (Bot): 413.353'
Type: SAN.MH w/ConBlock-CDA Red	Invert: 414.02'	Floor (Top): 413.853'	Overall Height: 16.5'
Size: 48"	Rim to Invert: 15.91'	Floor Height: 6"	Slack: 0.92"

Structure Notes:
1. PER ASTM C-478 SPECIFICATIONS
2. CONCRETE: 4,000 PSI AT 28 DAYS
3. REINFORCEMENT: PER ASTM A615
4. INVERT CHANNEL REQUIRED
5. CONBLOCK CDA RED ADMIXTURE REQUIRED
6. STEPS AT 90 DEGREES
7. JBS 1155 FRAME & COVER "SANITARY" SUPPLIED BY ICAST

STRUCTURE SUMMARY:

P5) 24" - CASTING HEIGHT - 6"	0 lb
P4) 48" - ECC CONE w/ 24" HOLE, w/ConBlock-CDA Red F/G - 36"	2251 lb
P3) 48" - MH RISER w/ConBlock-CDA Red T/G - 60"	4192 lb
P2) 48" - MH RISER w/ConBlock-CDA Red T/G - 60"	4192 lb
P1) 48" - MH BASE w/ConBlock-CDA Red T/n - 30"	3330 lb
1) 48" - MH INVERT CHANNEL w/ConBlock-CDA Red - FULL HEIGHT	1440 lb
1) JOINT WRAP - 0.065"x6"x50' CONSEAL CS212	0 lb
1) JOINT WRAP PRIMER - CONSEAL CS-75 (1 gal.)	0 lb
1) ADMIXTURE CONBLOCK CDA RED	0 lb
1) CASTING - JBS 1155 F/C SANITARY	250 lb
3) 48" - Conseal CS-102 1.00" (Double)	0 lb
1) 24" - Conseal CS-102 1.00" (Double)	0 lb
2) PSX - 12-08 NYLO	16 lb
15) MH Step ML-10-TDS-NCR - 10"	0 lb
Structure Total:	15670 lb

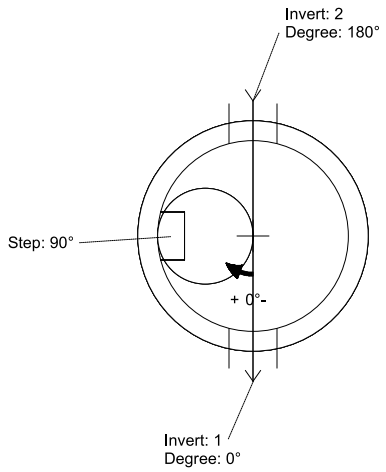

Position	Elev	Angle	Pipe	Pipe OD	Hole	Connector	Up (_)	Ref
Rim	429.93'							
Reducer								
Invert 1	414.02'	0°	8" PVC SDR26	8.5"	12"	PSX 12-08 NYLO	0"	P1
Invert 2	414.12'	180°	8" PVC SDR26	8.5"	12"	PSX 12-08 NYLO	1.25"	P1
Invert 3								
Invert 4								
Invert 5								
Invert 6								
Invert 7								
Invert 8								

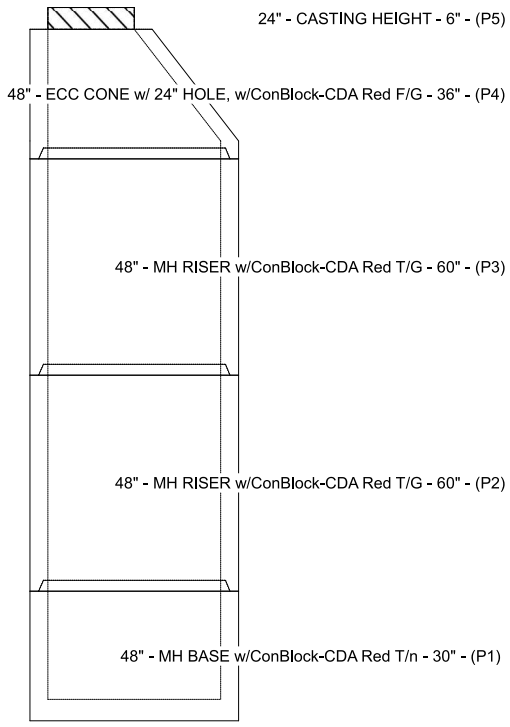

Cast (Int. Dim.) - Interior Dimensions

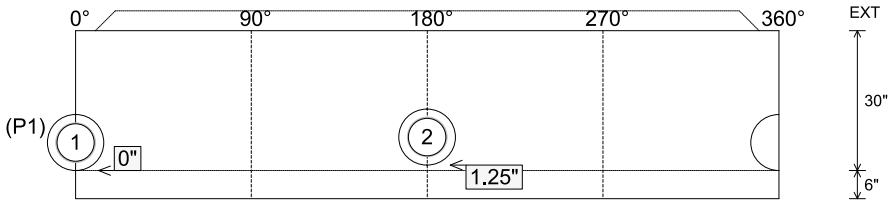

Submittal Drawing
5/14/2026 11:42:58 AM

SUBMITTAL
APPROVED BY: