Job Name: 25-2397 Sandy Springs Sec. 2 Job Location: Elizabethtown, KY 42701 Contractor: Dirt Works Unlimited, LLC.	Plant: 100 7/9/2026 2:51:32 PM	Tech: Jared - A PC: Thomas Ryan	

Structure ID: Q

P1 MH072BA54 MH BASE

P3) 24" x 36" - CASTING HEIGHT - 6"	0 lb
P2) 72" - MH FLAT TOP SPEC. HT. (8") w/24"x36" Hole - 8"	3319 lb
P1) 72" - MH BASE - 54"	8816 lb
1) CASTING - HOE 525 SET (F/G/H)	442 lb
1) 72" - Conseal CS-102 1.00"	0 lb
1) 24" x 36" - Conseal CS-102 1.00"	0 lb
1) DOGHOUSE INVRTD - 54"x51"	0 lb
1) Hole - 50	0 lb
4) MH Step ML-10-TDS-NCR - 10"	0 lb
Structure Total:	12578 lb

Structure Notes:
PLAN LABEL: Q
1. HOE 525 SET (F/G/H) PROVIDED BY ICAST.
2. PER ASTM C478 SPECIFICATIONS.
3. CONCRETE = 4,000 PSI AT 28 DAYS.
4. REINFORCING PER ASTM A615 (GRADE 60).
- TOP SLAB (As .62) #5 BARS AT 6" C.C.E.W..
- RISER/WALLS (As .18)
- FLOOR (As .37) #5 BARS AT 10" C.C.E.W.

Rim: 689.94' Rim to Invert: 5.35' Slack: 0.7" Sump: 4.5" Step Position: 90°

Position	Elev	Angle	Ext. (cw)	Pipe	Pipe OD	Connector	Hole	Horz Size	Up (_)	Offset
Invert 1	684.59'	0°	0"	42" RCP B WALL	51"	DOGHOUSE INVRTD 54"x51"	54" x 51"	61.06"	0"	0"
Invert 2	684.59'	180°	135.088"	42" HDPE	47.7"	Hole 50	50"	55.271"	1.35"	0"
Invert 3										
Invert 4										
Invert 5										
Invert 6										
Invert 7										
Invert 8										

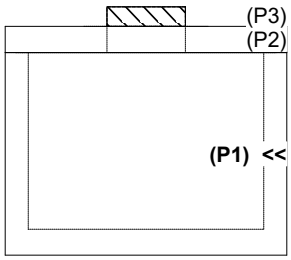

RIGHT-SIDE UP VIEW (int. dimensions)

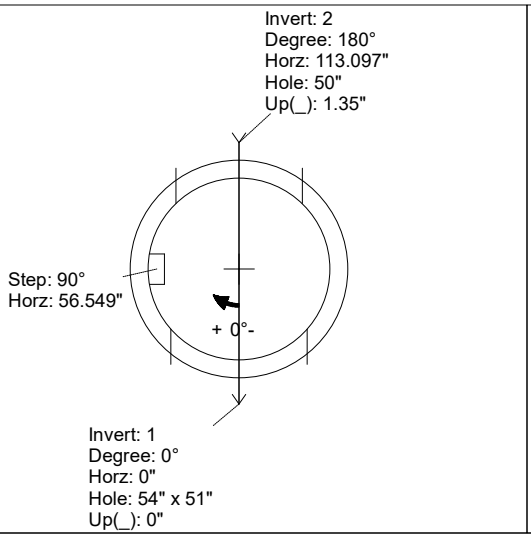

UPSIDE-DOWN VIEW (int. dimenions)

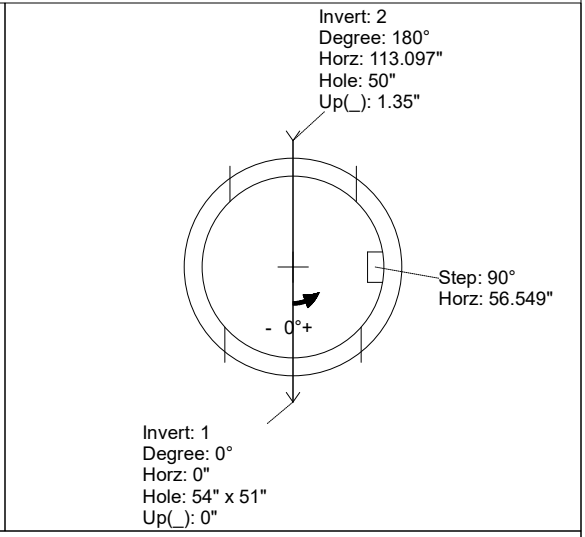

INSIDE WALL DIMENSIONS

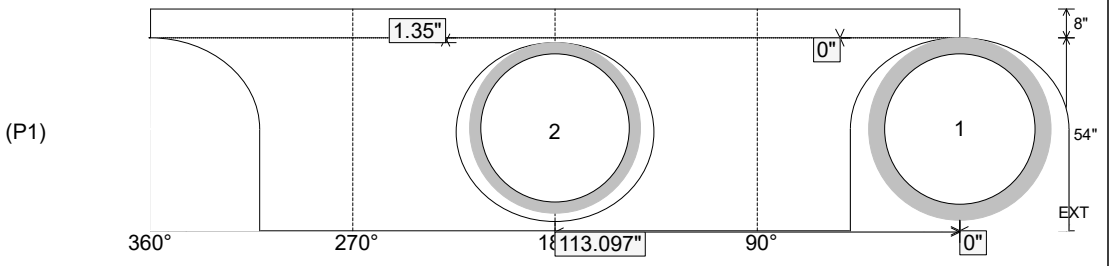

Coating (Int): Coating (Ext):	Seam Up: Flat Seam Dn: n/a	Wall Thickness: 7" Floor Height: 8"	Height (Int): 54" Height (Ext): 62"	Weight (Net): 8816 lb Volume (Net): 2.25cu.yd