Job Name: 25-2397 Sandy Springs Sec. 2 Job Location: Elizabethtown, KY 42701 Contractor: Dirt Works Unlimited, LLC.	Plant: 100 7/9/2026 2:52:13 PM	Tech: Jared - A PC: Thomas Ryan	

Structure ID: I

P2 MH060LD08-24X36RECT MH FLAT TOP w/24"x36" Hole

P3) 24" x 36" - CASTING HEIGHT - 6"	0 lb
P2) 60" - MH FLAT TOP w/24"x36" Hole - 8"	2153 lb
P1) 60" - MH BASE Custom Ht - 41"	5610 lb
1) CASTING - HOE 525 SET (F/G/H)	442 lb
1) 60" - Conseal CS-102 1.00"	0 lb
1) 24" x 36" - Conseal CS-102 1.00"	0 lb
1) Hole - 38	0 lb
1) Hole - 30	0 lb
1) Hole - 32	0 lb
3) MH Step ML-10-TDS-NCR - 10"	0 lb
Structure Total:	8205 lb

Structure Notes:
PLAN LABEL: I
1. HOE 525 SET (F/G/H) PROVIDED BY ICAST.
2. PER ASTM C478 SPECIFICATIONS.
3. CONCRETE = 4,000 PSI AT 28 DAYS.
4. REINFORCING PER ASTM A615 (GRADE 60).
- TOP SLAB (As .62) #5 BARS AT 6" C.C.E.W..
- RISER/WALLS (As .18)
- FLOOR (As .37) #5 BARS AT 10" C.C.E.W.

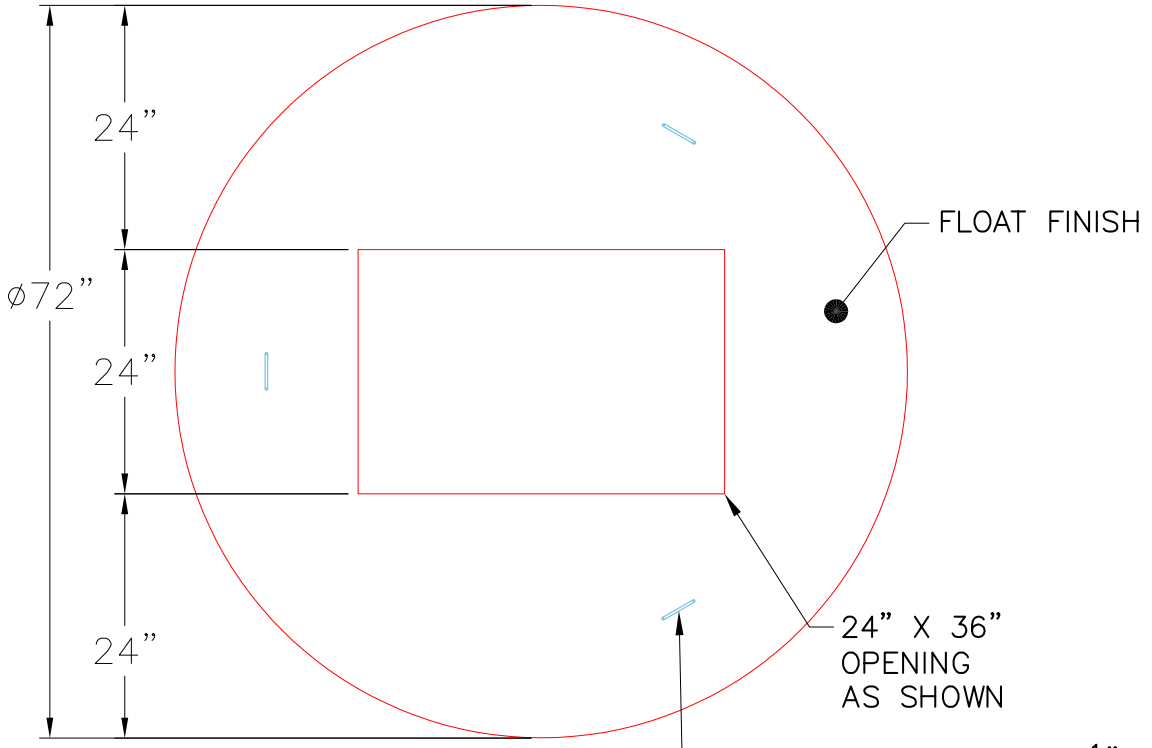

TOP VIEW

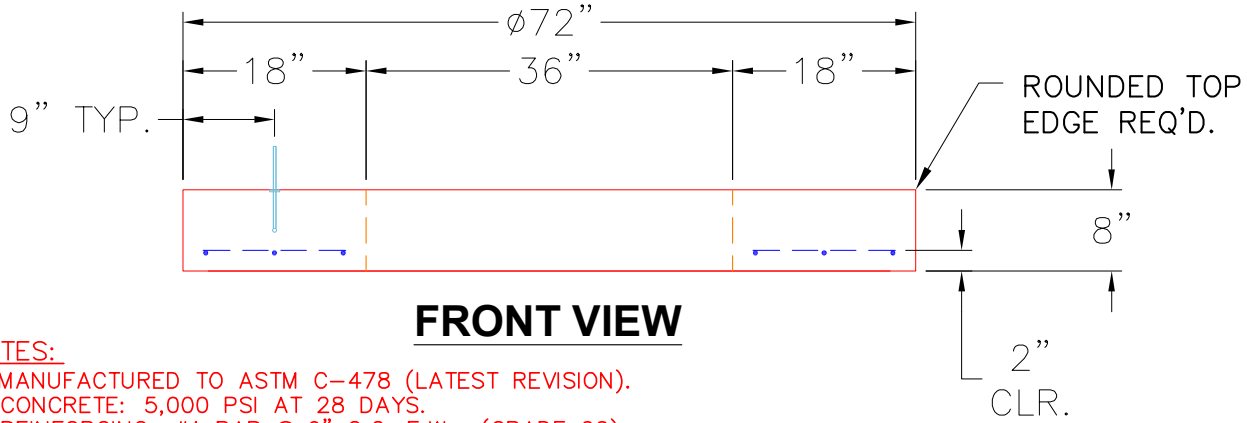

FRONT VIEW

NOTES:
1. MANUFACTURED TO ASTM C-478 (LATEST REVISION).
2. CONCRETE: 5,000 PSI AT 28 DAYS.
3. REINFORCING: #4 BAR @ 9" O.C. E.W. (GRADE 60).

Coating (Int): Coating (Ext):	Seam Up: Flat Seam Dn: Flat	Wall Thickness: 6"	Height (Ext): 8"	Weight (Net): 2153 lb Volume (Net): 0.55cu.yd