Job Name: 25-2284C Parks at Cane Ridge Ph.2B Job Location: Antioch, TN Contractor: Josh King Excavating	Plant: Beaver Dam 7/21/2026 8:50:19 AM	Tech: S. Felletter PC: A. Chambers	

Structure ID: QL19

P3 GR28x28x6x6 GRADE RING 6"W F/F

P23) 28" x 28" - GRADE RING 6"W F/F - 6"	411 lb
P22) 28" x 28" - GRADE RING 6"W F/F - 6"	411 lb
P21) 28" x 28" - GRADE RING 6"W F/F - 6"	411 lb
P20) 28" x 28" - GRADE RING 6"W F/F - 6"	411 lb
P19) 28" x 28" - GRADE RING 6"W F/F - 6"	411 lb
P18) 28" x 28" - GRADE RING 6"W F/F - 6"	411 lb
P17) 28" x 28" - GRADE RING 6"W F/F - 6"	411 lb
P16) 28" x 28" - GRADE RING 6"W F/F - 6"	411 lb
P15) 28" x 28" - GRADE RING 6"W F/F - 6"	411 lb
P14) 28" x 28" - GRADE RING 6"W F/F - 6"	411 lb
P13) 28" x 28" - GRADE RING 6"W F/F - 6"	411 lb
P12) 28" x 28" - GRADE RING 6"W F/F - 6"	411 lb
P11) 28" x 28" - GRADE RING 6"W F/F - 6"	411 lb
P10) 28" x 28" - GRADE RING 6"W F/F - 6"	411 lb
P9) 28" x 28" - GRADE RING 6"W F/F - 6"	411 lb
P8) 28" x 28" - GRADE RING 6"W F/F - 6"	411 lb
P7) 28" x 28" - GRADE RING 6"W F/F - 6"	411 lb
P6) 28" x 28" - GRADE RING 6"W F/F - 6"	411 lb
P5) 28" x 28" - GRADE RING 6"W F/F - 6"	411 lb
P4) 28" x 28" - GRADE RING 6"W F/F - 6"	411 lb
P3) 28" x 28" - GRADE RING 6"W F/F - 6"	411 lb
P2) 28" x 28" - GRADE RING 6"W F/F - 6"	411 lb
P1) 28" x 28" - GRADE RING 6"W F/F - 6"	411 lb
Structure Total:	9449 lb

Structure Notes: .
1. PER ASTM C913 SPECIFICATIONS.
2. CONCRETE = 4,000 PSI AT 28 DAYS.
.
REINFORCING PER ASTM A615 (GRADE 60).
- WALLS (As .31) #5 BARS AT 12" C.C.E.W.

NOTES:
1. MANUFACTURED TO ASTM C-478 (LATEST REVISION).
2. CONCRETE = 4,000 PSI @ 28 DAYS.
3. REINFORCING: #4 BAR AS SHOWN (GRADE 60 KSI).
4. LIFTS: 2 EA. CONAC .8 TON WIRE ROPE ANCHORS REQUIRED.

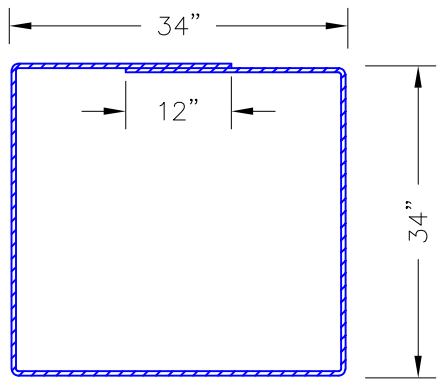

#4 BAR REINFORCING

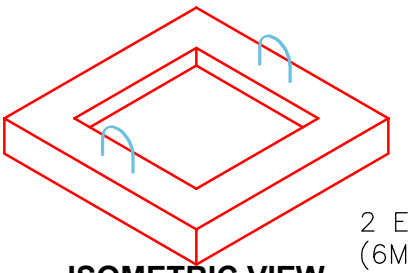

ISOMETRIC VIEW

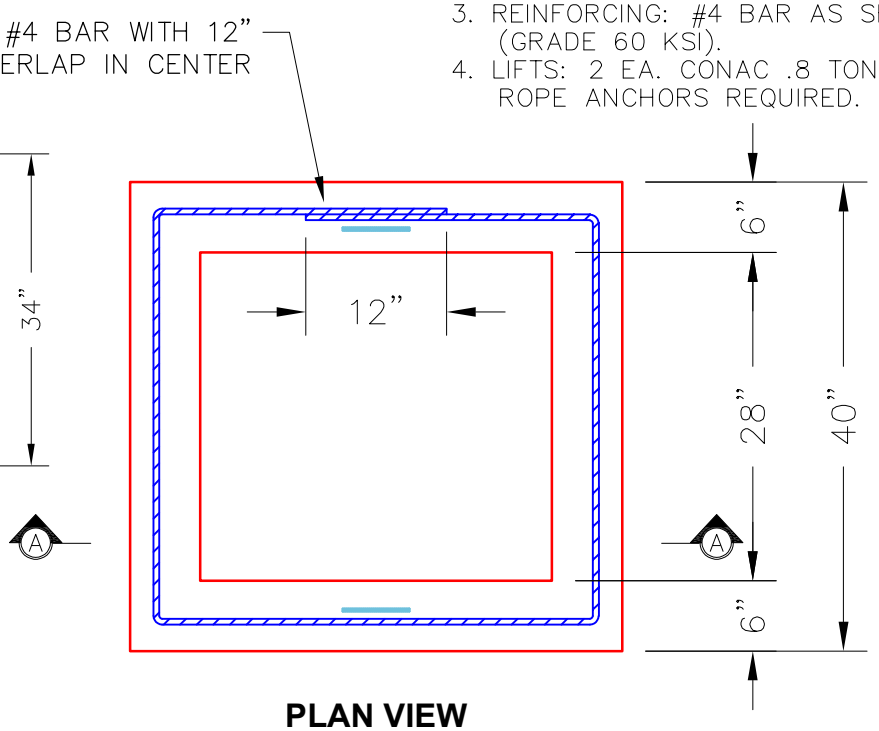

PLAN VIEW

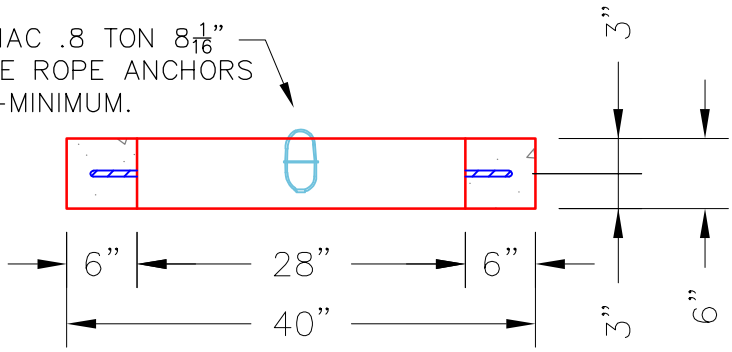

SECTION A-A

Coating (Int): Coating (Ext):	Seam Up: Flat Seam Dn: Flat	Wall Thickness: 6"	Height (Ext): 6"	Weight (Net): 411 lb Volume (Net): 0.1cu.yd