Job Name: 25-1965 ACEE'S MARKET & DELI Job Location: Fulton, KY Contractor: Rinker Underground	Plant: Beaver Dam 12/2/2025 7:54:13 AM	Tech: J. Coppage PC: J.Jarvis	

Structure ID: FES-7

P1 FES12B **12" - RCP FLARED END SECTION BELL (OUTLET)**

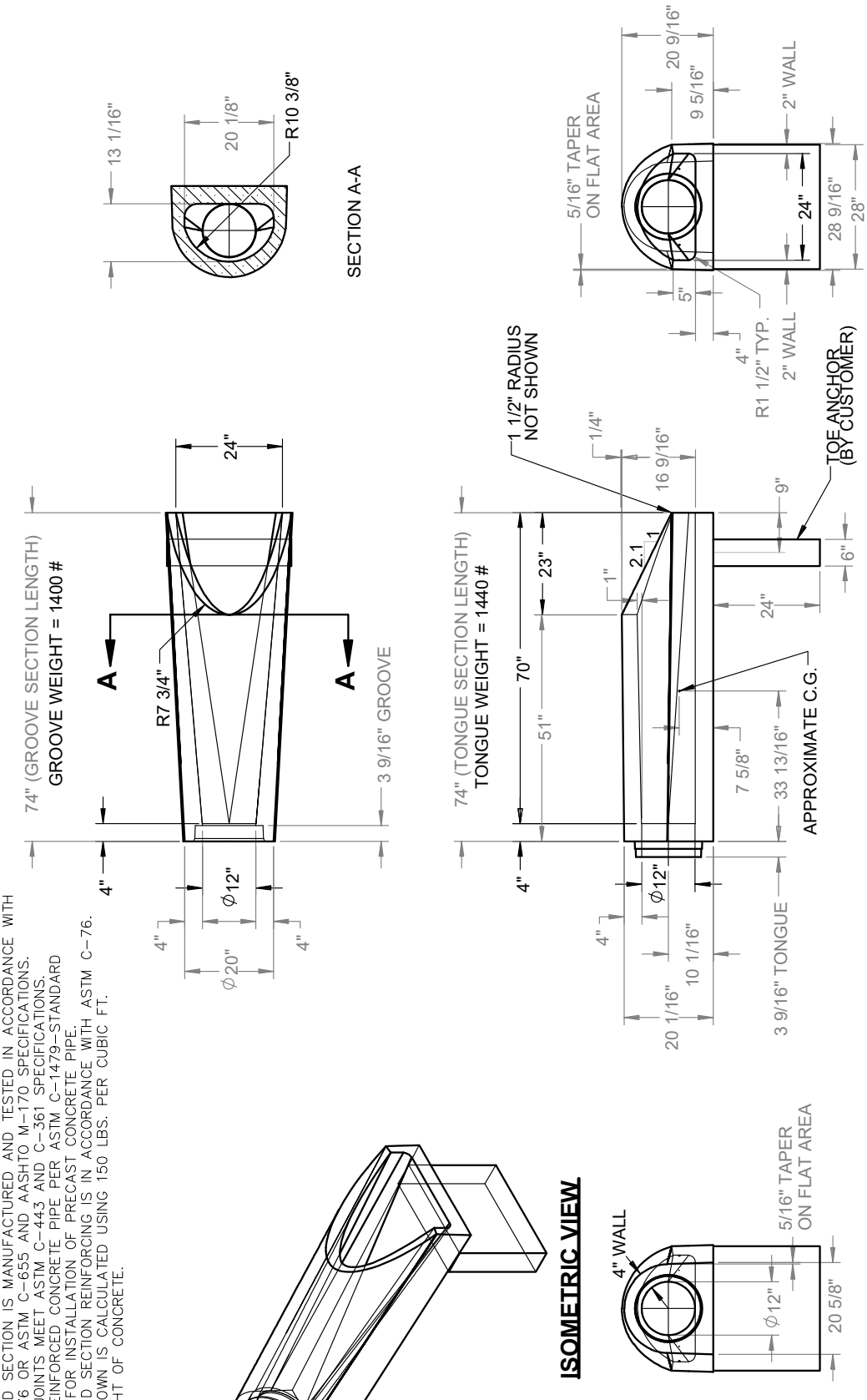

GENERAL NOTES:

1. FLARED END SECTION IS MANUFACTURED AND TESTED IN ACCORDANCE WITH ASTM C-76 OR ASTM C-655 AND AASHTO M-170 SPECIFICATIONS.
2. ALL PIPE JOINTS MEET ASTM C-443 AND C-361 SPECIFICATIONS.
3. INSTALL REINFORCED CONCRETE PIPE PER ASTM C-1479-STANDARD PRACTICE FOR INSTALLATION OF PRECAST CONCRETE PIPE.
4. FLARED END SECTION REINFORCING IS IN ACCORDANCE WITH ASTM C-76.
5. WEIGHT SHOWN IS CALCULATED USING 150 LBS. PER CUBIC FT. UNIT WEIGHT OF CONCRETE.