Job Name: 25-1684P15 KYTC Jefferson Co. Call 200 (251007) Job Location: I-264 Louisville, Ky. Contractor: Cleary Construction, Inc.	Plant: Beaver Dam, Ky. 8/17/2026 10:44:07 AM	Tech: J. Coppage PC: T. Ryan	

Structure ID: 2031+50 LT CBIB INLET 24

P1 BX2436-08BVF **BOX BASE 8inW, 8inF, Variable Ht**

P4) 8" x 120" - CB INLET KY B 10' TOP - 9"	1660 lb
P3) 24" x 120" - CB INLET KY B 10' BOTTOM LEFT - 17"	2650 lb
P2) 24" x 36" - CB FT REDUCER 24"X24" HOLE - 8"	1010 lb
P1) 24" x 36" - BOX BASE 8inW, 8inF, Variable Ht - 26"	3461 lb
1) 24" x 36" - Conseal CS-102 1.00"	0 lb
1) 24" x 24" - Conseal CS-102 1.00"	0 lb
2) Hole - 22	0 lb
Structure Total:	8781 lb

Structure Notes: .
-KYTC STATE PROJECT 251007
-REINFORCING: #5 BAR @ 12" C/C E.W. (TYP.)
-CS-102 BUTYL REQUIRED (SUPPLIED BY ICAST).
-KYTC CERTIFICATIONS REQUIRED.

Rim: 588.68' Rim to Invert: 5.28' Slack: 3.36" Sump: 0" Step Position:

Position	Elev	Angle	Ext. (cw)	Pipe	Pipe OD	Connector	Hole	Horz Size	Up (_)	Offset
Invert 1	583.4'	0°	20"	18" CMP	19"	Hole 22	22"	22"	-2"	0"
Invert 2	583.4'	130°	29.078"	18" CMP	19"	Hole 22	22"	28.719"	-2"	-10.498"
Invert 3										
Invert 4										
Invert 5										
Invert 6										
Invert 7										
Invert 8										

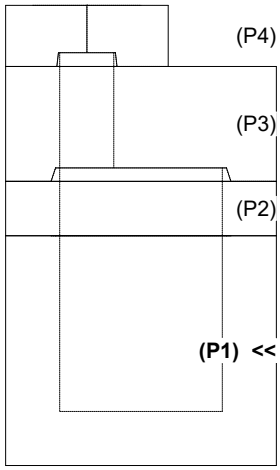

RIGHT-SIDE UP VIEW (int. dimensions)

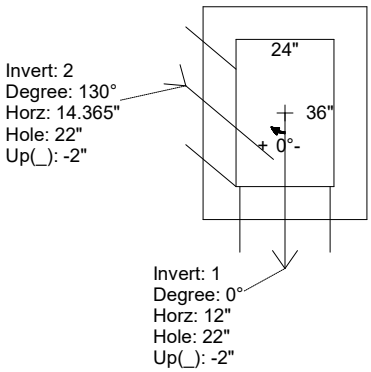

UPSIDE-DOWN VIEW (int. dimenions)

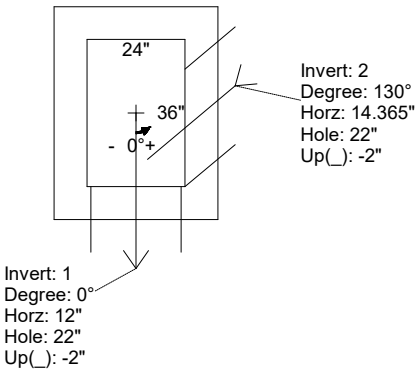

INSIDE WALL DIMENSIONS

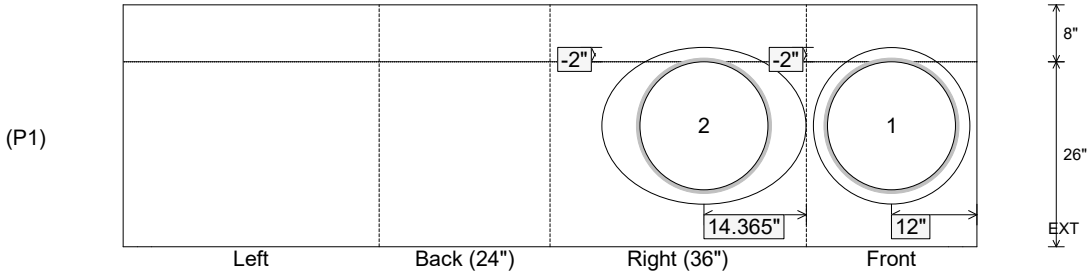

Coating (Int): Coating (Ext):	Seam Up: Flat Seam Dn: n/a	Wall Thickness: 8" Floor Height: 8"	Height (Int): 26" Height (Ext): 34"	Weight (Net): 3461 lb Volume (Net): 0.88cu.yd