Job Name: 25-1684P14 KYTC Jefferson Co. Call 200 (251007) Job Location: I-264 Louisville, Ky. Contractor: Cleary Construction, Inc.	Plant: Beaver Dam, KY 8/4/2026 11:26:42 AM	Tech: J. Coppage PC: T. Ryan	

Structure ID: 5098+23 LT CBBI-MOD B1

P1 BX2436-08BA42 BOX BASE 8inW, 8inF

P3) 24" x 120" - CASTING (cast in) - 3"	0 lb
P2) 24" x 120" - CB MED BAR BOX INLET 9B1 LH - 17"	4000 lb
P1) 24" x 36" - BOX BASE 8inW, 8inF - 42"	5171 lb
1) 24" x 36" - Conseal CS-102 1.00"	0 lb
2) Hole - 22	0 lb
Structure Total:	9171 lb

Structure Notes: .
-KYTC STATE PROJECT 251007
-REINFORCING: #5 BAR @ 12" C/C E.W. (TYP.)
-CASTING FRAMES & GRATES BY OTHERS.
-CS-102 BUTYL REQUIRED (SUPPLIED BY ICAST).
-KYTC CERTIFICATIONS REQUIRED.

Rim: 586.85' Rim to Invert: 5.3' Slack: 4.6" Sump: 0" Step Position:

Position	Elev	Angle	Ext. (cw)	Pipe	Pipe OD	Connector	Hole	Horz Size	Up (_)	Offset
Invert 1	581.55'	90°	26"	18" CMP	19"	Hole 22	22"	22"	-2"	0"
Invert 2	581.55'	270°	26"	18" CMP	19"	Hole 22	22"	22"	-2"	0"
Invert 3										
Invert 4										
Invert 5										
Invert 6										
Invert 7										
Invert 8										

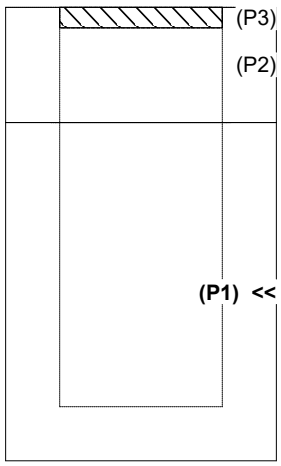

RIGHT-SIDE UP VIEW (int. dimensions)

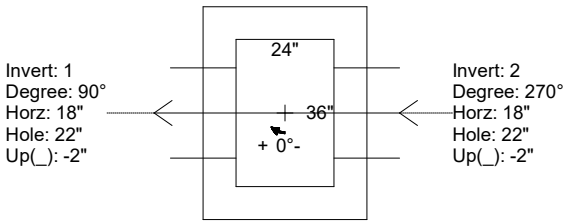

UPSIDE-DOWN VIEW (int. dimenions)

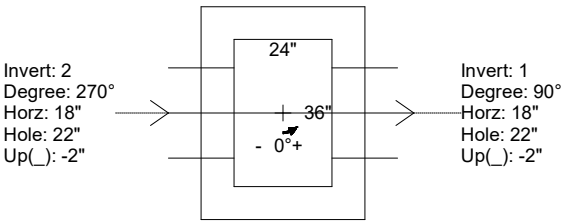

INSIDE WALL DIMENSIONS

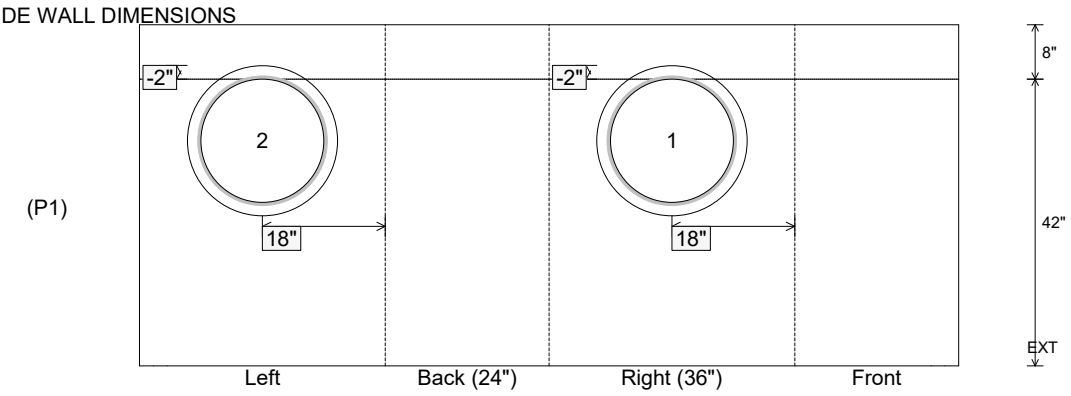

Coating (Int): Coating (Ext):	Seam Up: Flat Seam Dn: n/a	Wall Thickness: 8" Floor Height: 8"	Height (Int): 42" Height (Ext): 50"	Weight (Net): 5171 lb Volume (Net): 1.32cu.yd