Job Name: 25-1684P14 KYTC Jefferson Co. Call 200 (251007) Job Location: I-264 Louisville, Ky. Contractor: Cleary Construction, Inc.	Plant: Beaver Dam, KY 8/4/2026 11:26:35 AM	Tech: J. Coppage PC: T. Ryan	

Structure ID: 5092+83 LT CBBI-MOD B1

P1 BX3648-08BA54 BOX BASE 8inW, 8inF

P3) 24" x 120" - CB MED BAR BOX INLET 9B1 LH - 17"	4000 lb
P2) 36" x 48" - CB FT REDUCER 24"X36" HOLE-FT - 8"	1654 lb
P1) 36" x 48" - BOX BASE 8inW, 8inF - 54"	7797 lb
1) 36" x 48" - Conseal CS-102 1.00"	0 lb
1) 24" x 36" - Conseal CS-102 1.00"	0 lb
2) Hole - 40	0 lb
Structure Total:	13451 lb

Structure Notes: .
-KYTC STATE PROJECT 251007
-REINFORCING: #5 BAR @ 12" C/C E.W. (TYP.)
-CASTING FRAMES & GRATES BY OTHERS.
-CS-102 BUTYL REQUIRED (SUPPLIED BY ICAST).
-KYTC CERTIFICATIONS REQUIRED.

Rim: 584.53' Rim to Invert: 6.9' Slack: 3.8" Sump: 0" Step Position:

Position	Elev	Angle	Ext. (cw)	Pipe	Pipe OD	Connector	Hole	Horz Size	Up (_)	Offset
Invert 1	577.63'	90°	32"	36" CMP	37"	Hole 40	40"	40"	-2"	0"
Invert 2	577.63'	270°	32"	36" CMP	37"	Hole 40	40"	40"	-2"	0"
Invert 3										
Invert 4										
Invert 5										
Invert 6										
Invert 7										
Invert 8										

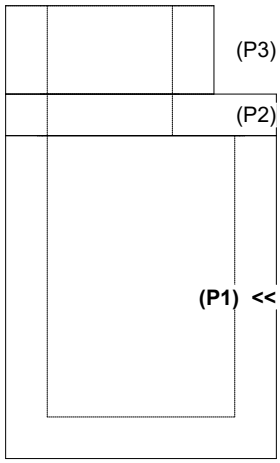

RIGHT-SIDE UP VIEW (int. dimensions)

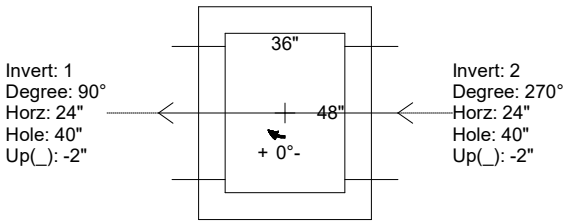

UPSIDE-DOWN VIEW (int. dimenions)

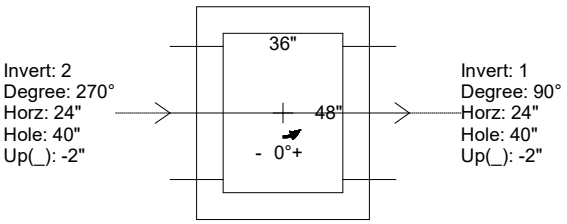

INSIDE WALL DIMENSIONS

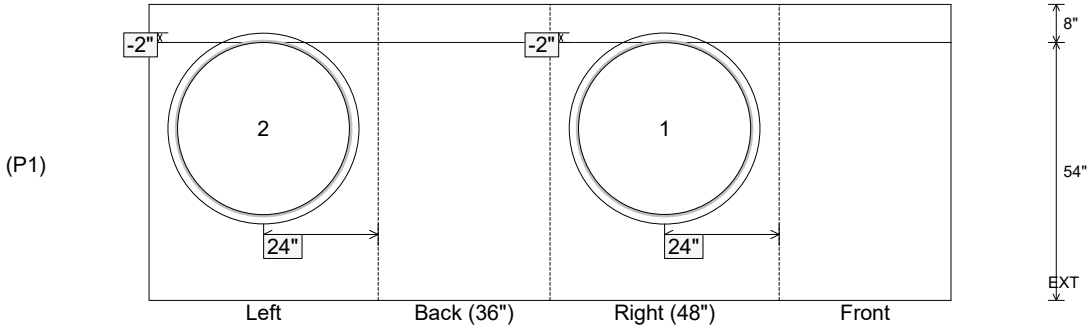

Coating (Int): Coating (Ext):	Seam Up: Flat Seam Dn: n/a	Wall Thickness: 8" Floor Height: 8"	Height (Int): 54" Height (Ext): 62"	Weight (Net): 7797 lb Volume (Net): 1.99cu.yd