Job Name: 24-4208 - KYTC Christian Co. Call 100 (ID 241018)
Job Location: Hopkinsville, KY
Contractor: Scotty's Contracting & Stone, LLC

Plant: Beaver Dam
8/3/2026 4:21:21 PM

Tech: J. Horsley
PC: C. Goff

Structure ID: 311 (454+25 LT)

P1 BX3636-08BAVF BOX BASE 8inW, 8inF, Variable Ht F/n

P4) 24" x 120" - CB INLET KY A 10' TOP SAG F/G - 10"	3398 lb
P3) 24" x 120" - CB INLET KY A 10' BOTTOM SAG T/G - 18"	5270 lb
P2) 36" x 36" - CB TRANSITION SLAB 24"X36" HOLE T/F - 8"	1235 lb
P1) 36" x 36" - BOX BASE 8inW, 8inF, Variable Ht F/n - 31"	4280 lb
1) CASTING - HOE KY-206 F/C (KY TY1)	206 lb
1) 36" x 36" - Conseal CS-102 1.00"	0 lb
1) 24" x 36" - Conseal CS-102 1.00"	0 lb
2) Hole - 30	0 lb
1) Hole - 20	0 lb
2) Hole - 6	0 lb
Structure Total:	14389 lb

Structure Notes: .
** KYTC STATE PROJECT **
1. PER KYTC CBI TYPE A / ASTM C913 SPEC'S.
2. CONCRETE = 4,000 PSI AT 28 DAYS.
3. HOE KY-206 F/C CAST INTO TOP SLAB.
.
REINFORCING PER ASTM A615 (GRADE 60).
- TOP PHASE (As .62) #5 BARS AT 6" C.C.E.W.
- TRANS SLAB (As .62) #5 BARS AT 6" C.C.E.W (DBL MAT.)
- WALLS (As .31) #5 BARS AT 12" C.C.E.W.
- FLOOR (As .31) #5 BARS AT 12" C.C.E.W.

Rim: 526.92' Rim to Invert: 5.66' Slack: 0.92" Sump: 0" Step Position:

Position	Elev	Angle	Ext. (cw)	Pipe	Pipe OD	Connector	Hole	Horz Size	Up (_)	Offset
Invert 1	521.26'	90°	26"	24" HDPE	27.8"	Hole 30	30"	30"	-1.9"	0"
Invert 2	522.01'	180°	26"	15" HDPE	17.6"	Hole 20	20"	20"	7.7"	0"
Invert 3	521.26'	270°	26"	24" HDPE	27.8"	Hole 30	30"	30"	-1.9"	0"
Invert 4	522.955'	0°	38"	4" HDPE (perf pipe)	4.8"	Hole 6	6"	6"	19.94"	12"
Invert 5	522.955'	0°	14"	4" HDPE (perf pipe)	4.8"	Hole 6	6"	6"	19.94"	-12"
Invert 6										
Invert 7										
Invert 8										

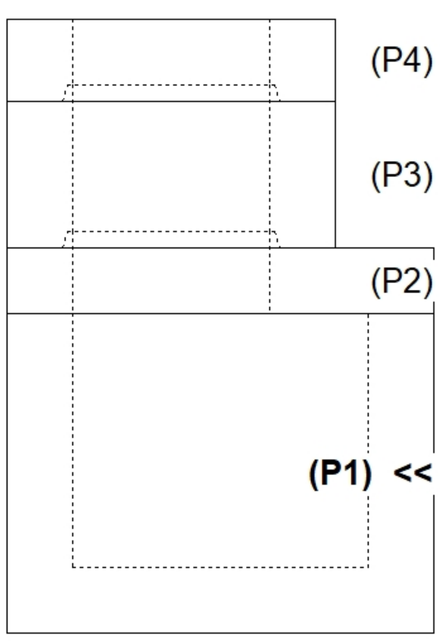

RIGHT-SIDE UP VIEW (int. dimensions)

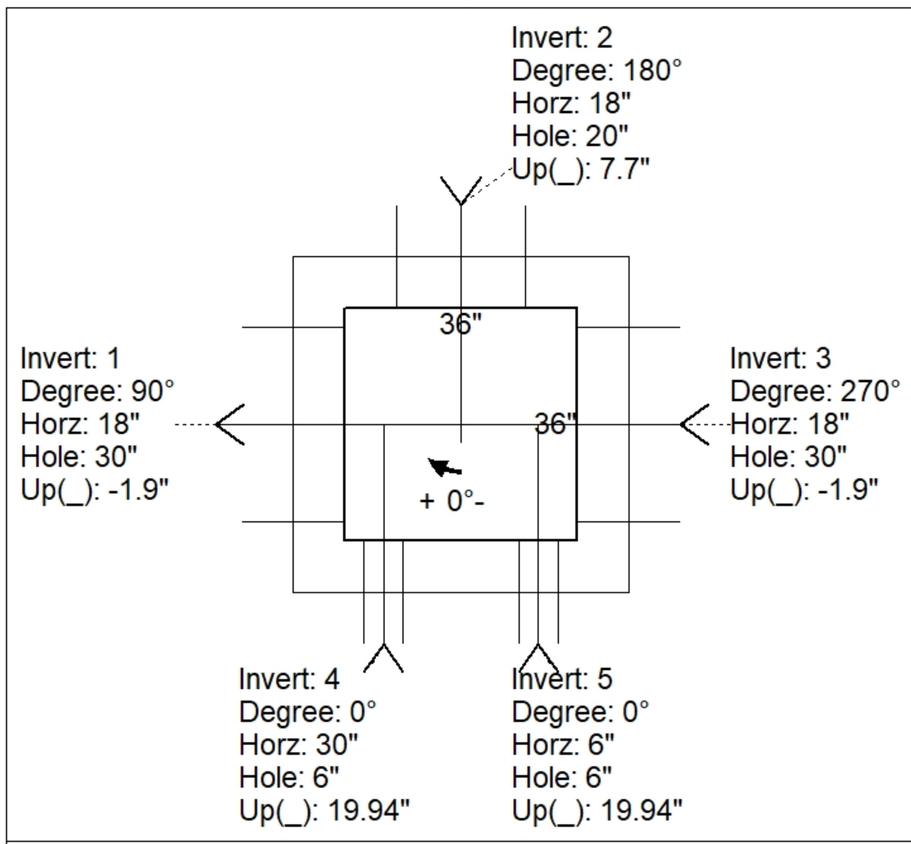

UPSIDE-DOWN VIEW (int. dimenions)

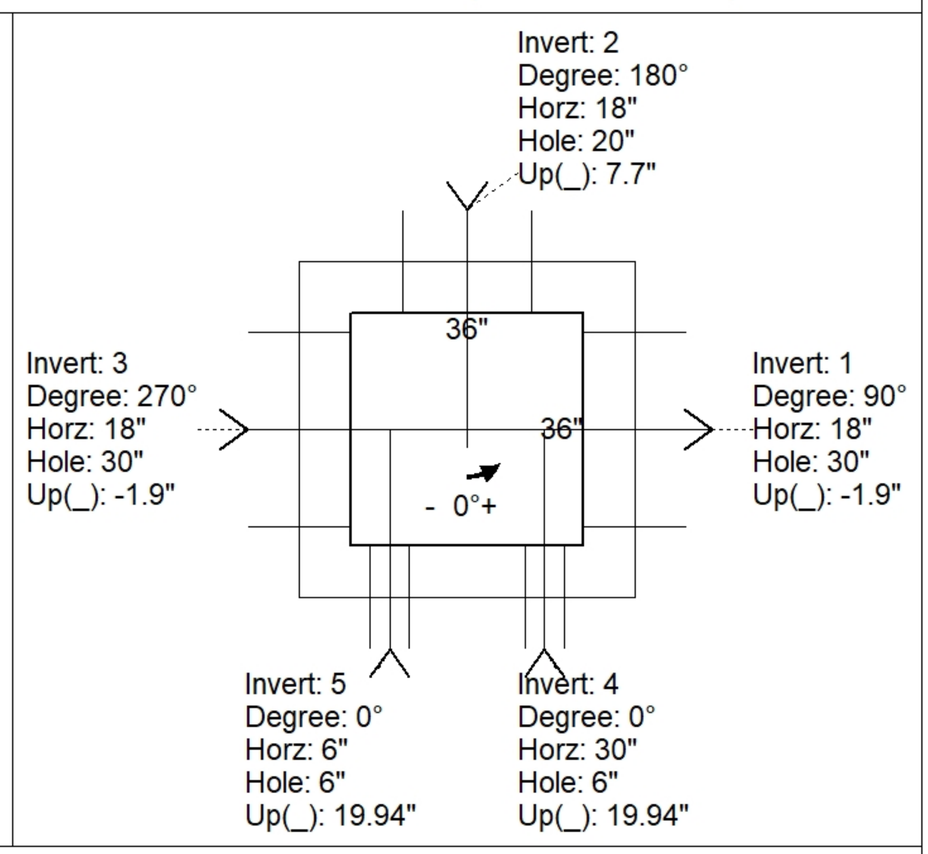

INSIDE WALL DIMENSIONS

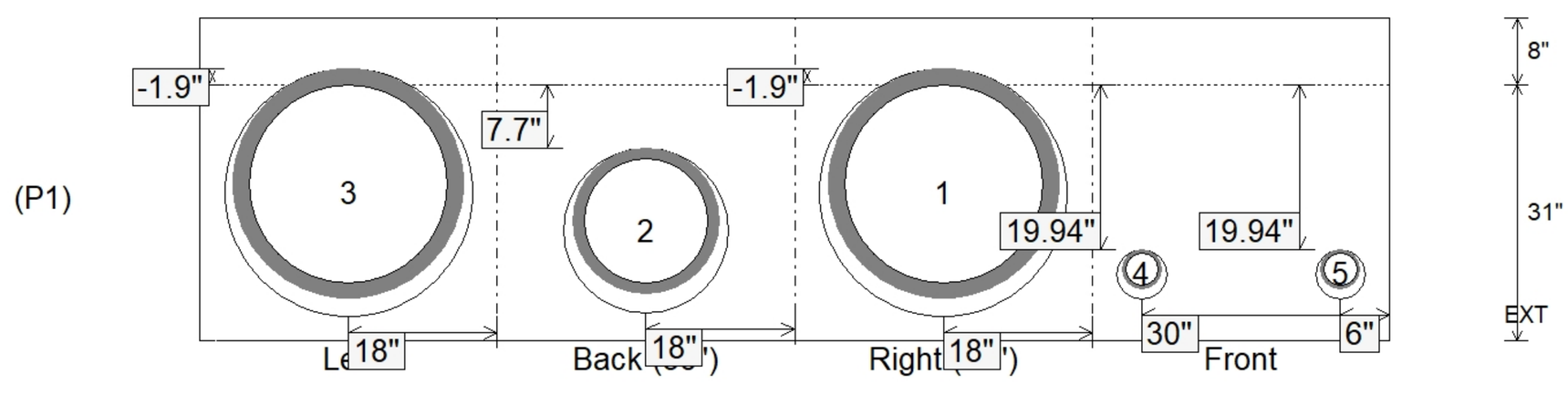

Coating (Int): Coating (Ext):	Seam Up: Flat Seam Dn: n/a	Wall Thickness: 8" Floor Height: 8"	Height (Int): 31" Height (Ext): 39"	Weight (Net): 4280 lb Volume (Net): 1.09cu.yd