Job Name: 24-4208 - KYTC Christian Co. Call 100 (ID 241018)
Job Location: Hopkinsville, KY
Contractor: Scotty's Contracting & Stone, LLC

Plant: Beaver Dam
8/3/2026 4:21:10 PM

Tech: J. Horsley
PC: C. Goff

## Structure ID: 301 (450+70 LT)

## P1 BX2436-08BVF BOX BASE 8inW, 8inF, Variable Ht F/n

| | |
|---|---|
| P4) 24" x 120" - CB INLET KY A 10' TOP RIGHT F/G - 10" | 3398 lb |
| P3) 24" x 120" - CB INLET KY A 10' BOTTOM RIGHT T/G - 18" | 5270 lb |
| P2) 24" x 36" - FIELD ADJUSTMENT - 3.5" | 0 lb |
| P1) 24" x 36" - BOX BASE 8inW, 8inF, Variable Ht F/n - 27" | 3877 lb |
| 1) CASTING - HOE KY-206 F/C (KY TY1) | 206 lb |
| 1) 24" x 36" - Conseal CS-102 1.00" | 0 lb |
| 1) Hole - 22 | 0 lb |
| 1) Hole - 6 | 0 lb |
| Structure Total: | 12751 lb |

Structure Notes: .
** KYTC STATE PROJECT **
1. PER KYTC CBI TYPE A / ASTM C913 SPEC'S.
2. CONCRETE = 4,000 PSI AT 28 DAYS.
3. HOE KY-206 F/C CAST INTO TOP SLAB.
.
REINFORCING PER ASTM A615 (GRADE 60).
- TOP PHASE (As .62) #5 BARS AT 6" C.C.E.W.
- WALLS (As .31) #5 BARS AT 12" C.C.E.W.
- FLOOR (As .31) #5 BARS AT 12" C.C.E.W.

Rim: 527' Rim to Invert: 4.9' Slack: 0.3" Sump: 0" Step Position:

| Position | Elev | Angle | Ext. (cw) | Pipe | Pipe OD | Connector | Hole | Horz Size | Up (_) | Offset |
|---|---|---|---|---|---|---|---|---|---|---|
| Invert 1 | 522.1' | 180° | 20" | 15" RCP B WALL | 19.5" | Hole 22 | 22" | 22" | -2.25" | 0" |
| Invert 2 | 523.33' | 0° | 20" | 4" HDPE (perf pipe) | 4.8" | Hole 6 | 6" | 6" | 14.36" | 0" |
| Invert 3 | | | | | | | | | | |
| Invert 4 | | | | | | | | | | |
| Invert 5 | | | | | | | | | | |
| Invert 6 | | | | | | | | | | |
| Invert 7 | | | | | | | | | | |
| Invert 8 | | | | | | | | | | |

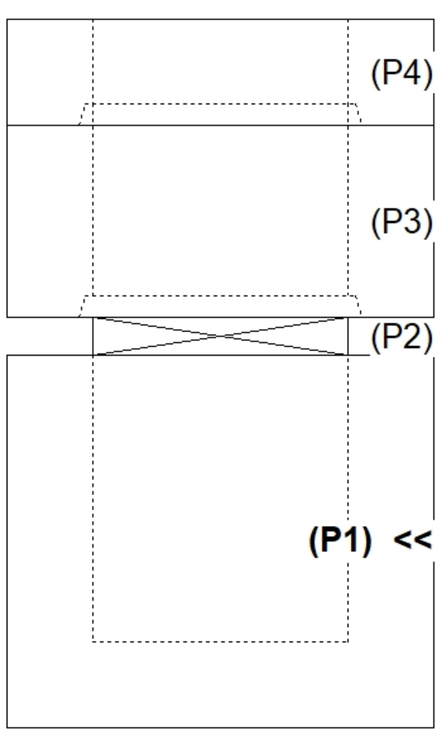


RIGHT-SIDE UP VIEW (int. dimensions)

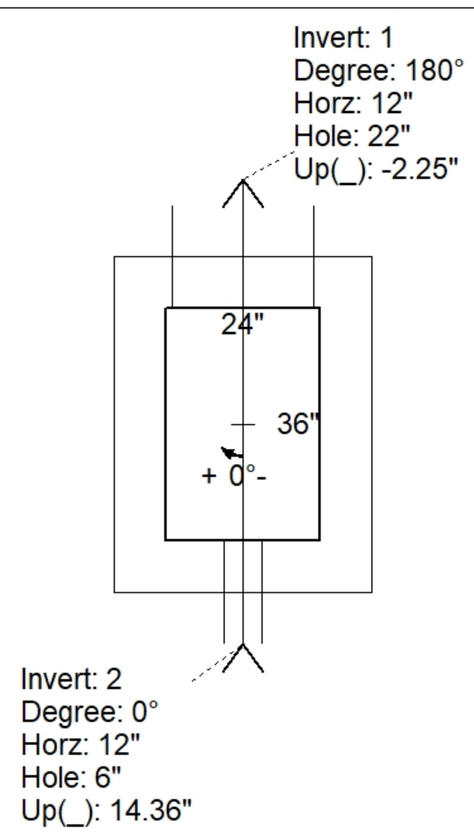


UPSIDE-DOWN VIEW (int. dimenions)

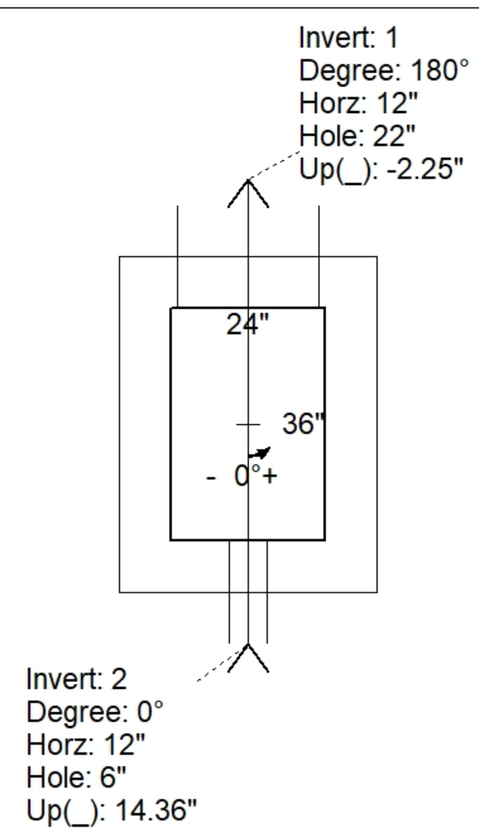


INSIDE WALL DIMENSIONS

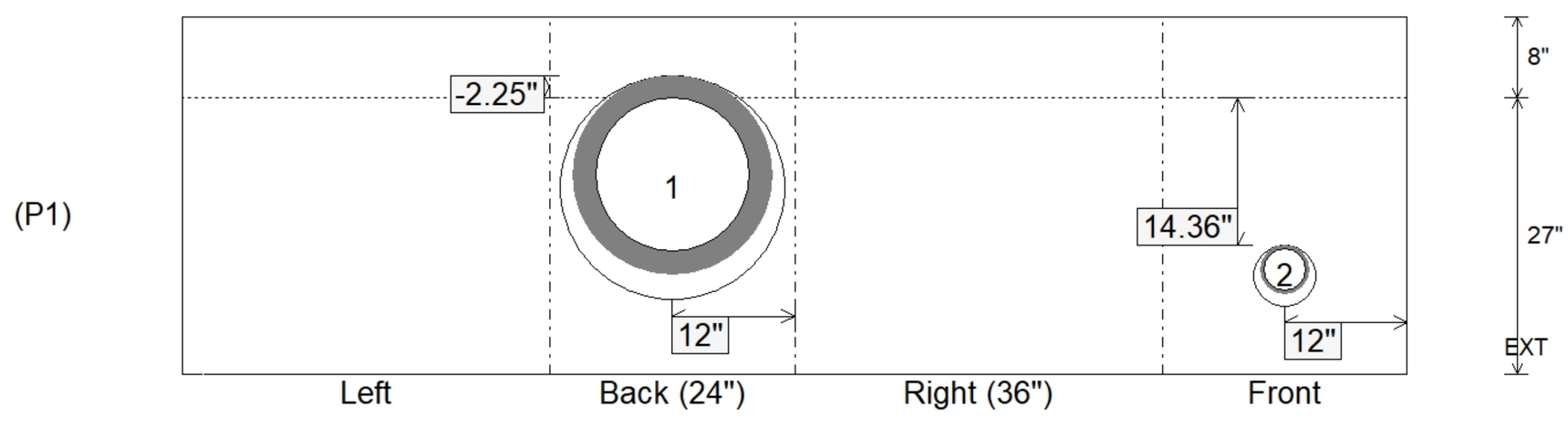


| | | | | |
|---|---|---|---|---|
| Coating (Int):<br>Coating (Ext): | Seam Up: Flat<br>Seam Dn: n/a | Wall Thickness: 8"<br>Floor Height: 8" | Height (Int): 27"<br>Height (Ext): 35" | Weight (Net): 3877 lb<br>Volume (Net): 0.99cu.yd |