Job Name: 24-4208 - KYTC Christian Co. Call 100 (ID 241018) Job Location: Hopkinsville, KY Contractor: Scotty's Contracting & Stone, LLC	Plant: Beaver Dam 7/30/2026 8:55:50 AM	Tech: J. Horsley PC: C. Goff	

Structure ID: 272 (437+45 RT)

P1 BX3648-08BAVF **BOX BASE 8inW, 8inF, Variable Ht F/n**

P7) 24" x 120" - CB INLET KY A 10' TOP LEFT F/G - 10"	3400 lb
P6) 24" x 120" - CB INLET KY A 10' BOTTOM LEFT T/G - 18"	5270 lb
P5) 24" x 36" - FIELD ADJUSTMENT - 3.5"	0 lb
P4) 24" x 36" - BOX RISER 8inW F/G - 36"	3188 lb
P3) 24" x 36" - BOX RISER 8inW T/G - 36"	3673 lb
P2) 36" x 48" - CB FT REDUCER 24"X36" HOLE T/F - 8"	1654 lb
P1) 36" x 48" - BOX BASE 8inW, 8inF, Variable Ht F/n - 58"	7980 lb
1) CASTING - HOE KY-206 F/C (KY TY1)	206 lb
1) 36" x 48" - Conseal CS-102 1.00"	0 lb
3) 24" x 36" - Conseal CS-102 1.00"	0 lb
2) Hole - 44	0 lb
1) Hole - 20	0 lb
1) Hole - 22	0 lb
1) Hole - 6	0 lb
Structure Total:	25371 lb

Rim: 546.02' Rim to Invert: 14.15' Slack: 0.3" Sump: 0" Step Position:

Structure Notes: .
** KYTC STATE PROJECT **
1. PER KYTC CBI TYPE A / ASTM C913 SPEC'S.
2. CONCRETE = 4,000 PSI AT 28 DAYS.
3. HOE KY-206 F/C CAST INTO TOP SLAB.
.
REINFORCING PER ASTM A615 (GRADE 60).
- TOP PHASE (As .62) #5 BARS AT 6" C.C.E.W.
- TRANS. SLAB (As .62) #5 BARS AT 6" C.C.E.W (DBL MAT)
- WALLS (As .31) #5 BARS AT 6" C.C.E.W.
- FLOOR (As .31) #5 BARS AT 6" C.C.E.W.

Position	Elev	Angle	Ext. (cw)	Pipe	Pipe OD	Connector	Hole	Horz Size	Up (_)	Offset
Invert 1	531.87'	270°	32"	36" HDPE	41.7"	Hole 44	44"	44"	-2.85"	0"
Invert 2										
Invert 3	531.87'	90°	32"	36" HDPE	41.7"	Hole 44	44"	44"	-2.85"	0"
Invert 4										
Invert 5										
Invert 6										
Invert 7										
Invert 8										

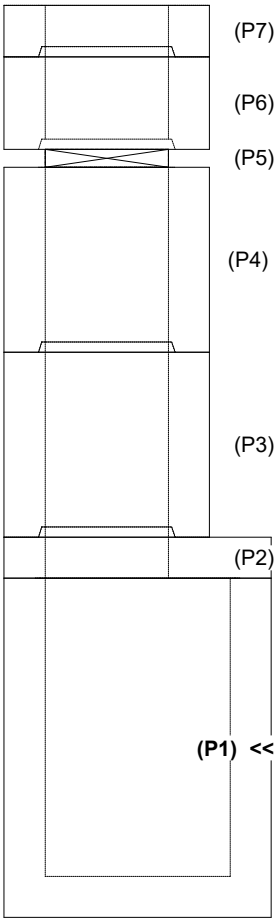

RIGHT-SIDE UP VIEW (int. dimensions)

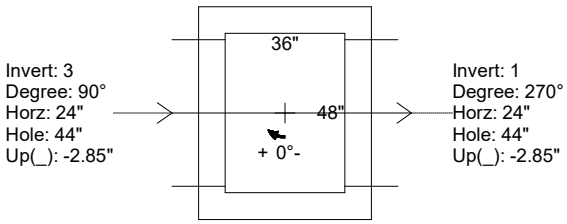

UPSIDE-DOWN VIEW (int. dimenions)

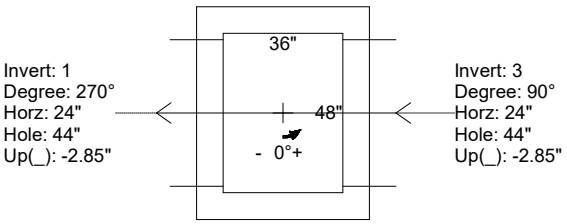

INSIDE WALL DIMENSIONS

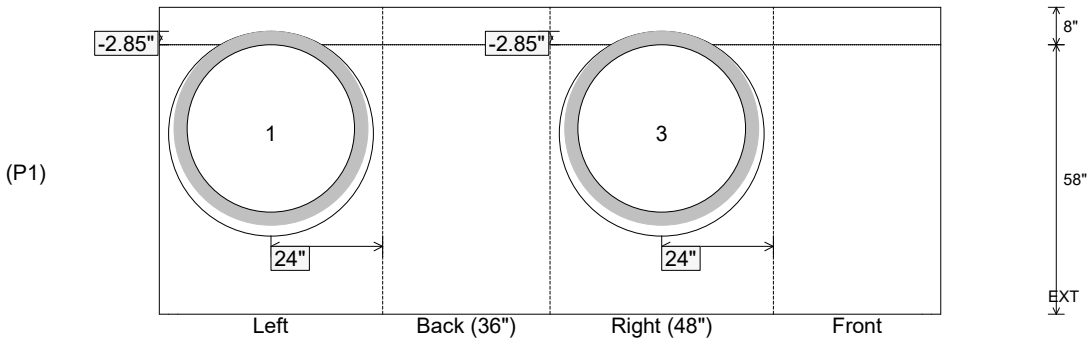

Coating (Int): Coating (Ext):	Seam Up: Flat Seam Dn: n/a	Wall Thickness: 8" Floor Height: 8"	Height (Int): 58" Height (Ext): 66"	Weight (Net): 7980 lb Volume (Net): 2.04cu.yd