Job Name: 24-4208 - KYTC Christian Co. Call 100 (ID 241018) Job Location: Hopkinsville, KY Contractor: Scotty's Contracting & Stone, LLC	Plant: Beaver Dam 7/30/2026 8:55:39 AM	Tech: J. Horsley PC: C. Goff	

Structure ID: 257 (431+95 LT)

P1 BX3648-08BA24 BOX BASE 8inW, 8inF F/n

P4) 24" x 120" - CB INLET KY A 10' TOP LEFT F/G - 10"	3400 lb
P3) 24" x 120" - CB INLET KY A 10' BOTTOM LEFT T/G - 18"	5270 lb
P2) 36" x 48" - CB FT REDUCER 24"X36" HOLE T/F - 8"	1654 lb
P1) 36" x 48" - BOX BASE 8inW, 8inF F/n - 24"	4640 lb
1) CASTING - HOE KY-206 F/C (KY TY1)	206 lb
1) 36" x 48" - Conseal CS-102 1.00"	0 lb
1) 24" x 36" - Conseal CS-102 1.00"	0 lb
1) DOGHOUSE INVRTD - 26"x25.50"	0 lb
1) Hole - 20	0 lb
1) Hole - 6	0 lb
Structure Total:	15170 lb

Structure Notes: .
** KYTC STATE PROJECT **
1. PER KYTC CBI TYPE A / ASTM C913 SPEC'S.
2. CONCRETE = 4,000 PSI AT 28 DAYS.
3. HOE KY-206 F/C CAST INTO TOP SLAB.
.
REINFORCING PER ASTM A615 (GRADE 60).
- TOP PHASE (As .62) #5 BARS AT 6" C.C.E.W.
- TRANS. SLAB (As .62) #5 BARS AT 6" C.C.E.W (DBL MAT)
- WALLS (As .31) #5 BARS AT 12" C.C.E.W.
- FLOOR (As .31) #5 BARS AT 12" C.C.E.W.

Rim: 542.7' Rim to Invert: 5.08' Slack: 0.96" Sump: 0" Step Position:

Position	Elev	Angle	Ext. (cw)	Pipe	Pipe OD	Connector	Hole	Horz Size	Up (_)	Offset
Invert 1	537.62'	225°	28.627"	18" RCP B WALL	23"	DOGHOUSE INVRTD 26"x25.50"	26" x 25.5"	36.77"	-2.5"	16"
Invert 2	537.7'	90°	32"	15" HDPE	17.6"	Hole 20	20"	20"	-0.34"	0"
Invert 3	538.82'	180°	26"	4" HDPE (perf pipe)	4.8"	Hole 6	6"	6"	14"	0"
Invert 4										
Invert 5										
Invert 6										
Invert 7										
Invert 8										

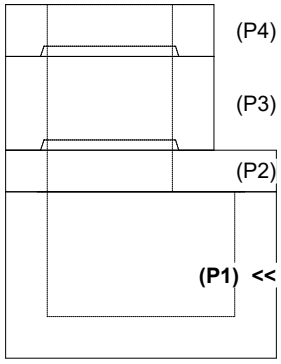

RIGHT-SIDE UP VIEW (int. dimensions)

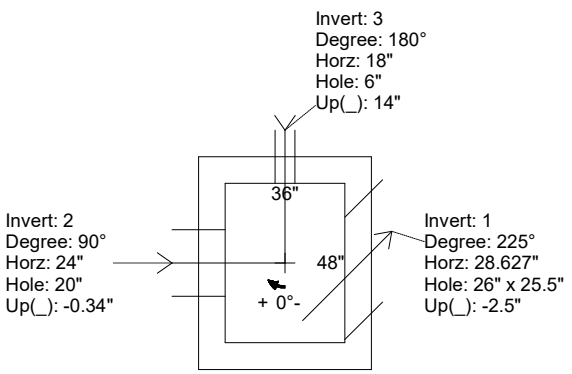

UPSIDE-DOWN VIEW (int. dimenions)

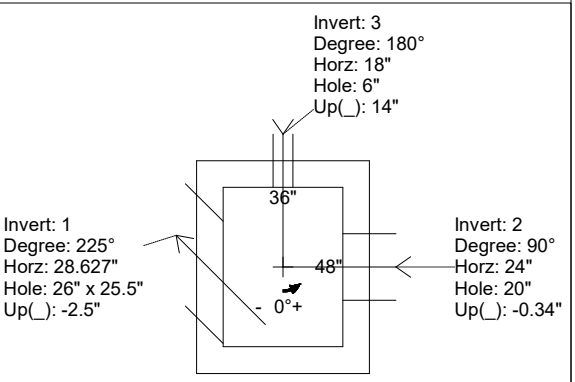

INSIDE WALL DIMENSIONS

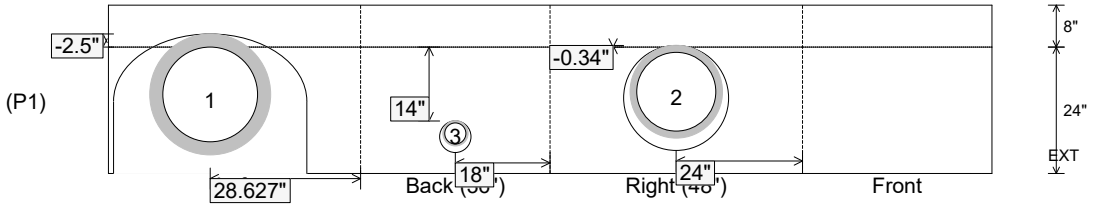

Coating (Int): Coating (Ext):	Seam Up: Flat Seam Dn: n/a	Wall Thickness: 8" Floor Height: 8"	Height (Int): 24" Height (Ext): 32"	Weight (Net): 4640 lb Volume (Net): 1.18cu.yd