Job Name: 24-4208 - KYTC Christian Co. Call 100 (ID 241018)
Job Location: Hopkinsville, KY
Contractor: Scotty's Contracting & Stone, LLC

PC: C. Goff
TECH: J. Horsley
Plant: Beaver Dam

Structure ID: **244 (428+40 RT)**

Spec: KYTC	Rim: 541.57'	Sump: 0"	Floor (Bot): 534.483'
Type: CBI TYPE A (10') private	Invert: 535.15'	Floor (Top): 535.15'	Overall Height: 7.083'
Size: 36" x 48"	Rim to Invert: 6.42'	Floor Height: 8"	Slack: 0.04"

Structure Notes: .
** KYTC STATE PROJECT **
1. PER KYTC CBI TYPE A / ASTM C913 SPEC'S.
2. CONCRETE = 4,000 PSI AT 28 DAYS.
3. HOE KY-206 F/C CAST INTO TOP SLAB.
.
REINFORCING PER ASTM A615 (GRADE 60).
- TOP PHASE (As .62) #5 BARS AT 6" C.C.E.W.
- TRANS. SLAB (As .62) #5 BARS AT 6" C.C.E.W (DBL MAT)
- WALLS (As .31) #5 BARS AT 12" C.C.E.W.
- FLOOR (As .31) #5 BARS AT 12" C.C.E.W.

STRUCTURE SUMMARY:

P4) 24" x 120" - CB INLET KY A 10' TOP LEFT F/G - 10"	3400 lb
P3) 24" x 120" - CB INLET KY A 10' BOTTOM LEFT T/G - 18"	5270 lb
P2) 36" x 48" - CB FT REDUCER 24"X36" HOLE T/F - 8"	1654 lb
P1) 36" x 48" - BOX BASE 8inW, 8inF, Variable Ht F/n - 41"	6197 lb
1) CASTING - HOE KY-206 F/C (KY TY1)	206 lb
1) 36" x 48" - Conseal CS-102 1.00"	0 lb
1) 24" x 36" - Conseal CS-102 1.00"	0 lb
2) Hole - 38	0 lb
1) Hole - 6	0 lb
Structure Total:	16727 lb

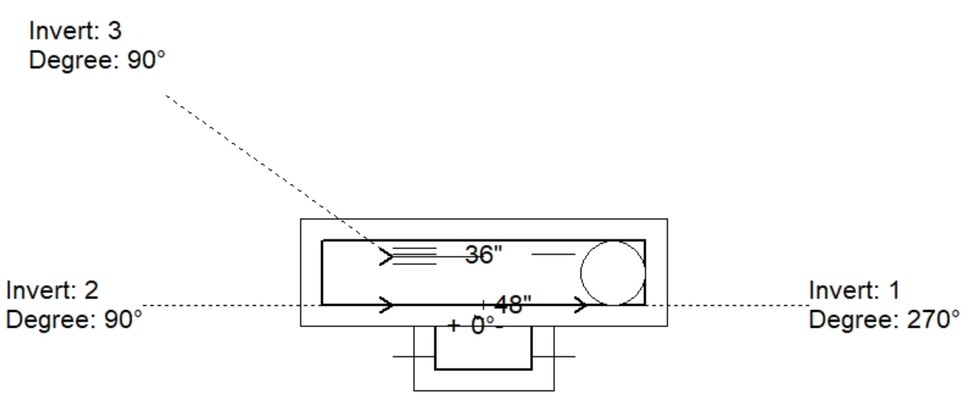

Position	Elev	Angle	Pipe	Pipe OD	Hole	Connector	Up (_)	Ref
Rim	541.57'							
Reducer	538.567'							
Invert 1	535.15'	270°	30" HDPE	35.1"	38"	Hole 38	-2.55"	P1
Invert 2	535.15'	90°	30" HDPE	35.1"	38"	Hole 38	-2.55"	P1
Invert 3	537.66'	90°	4" HDPE (perf pipe)	4.8"	6"	Hole 6	29.72"	P1
Invert 4								
Invert 5								
Invert 6								
Invert 7								
Invert 8								

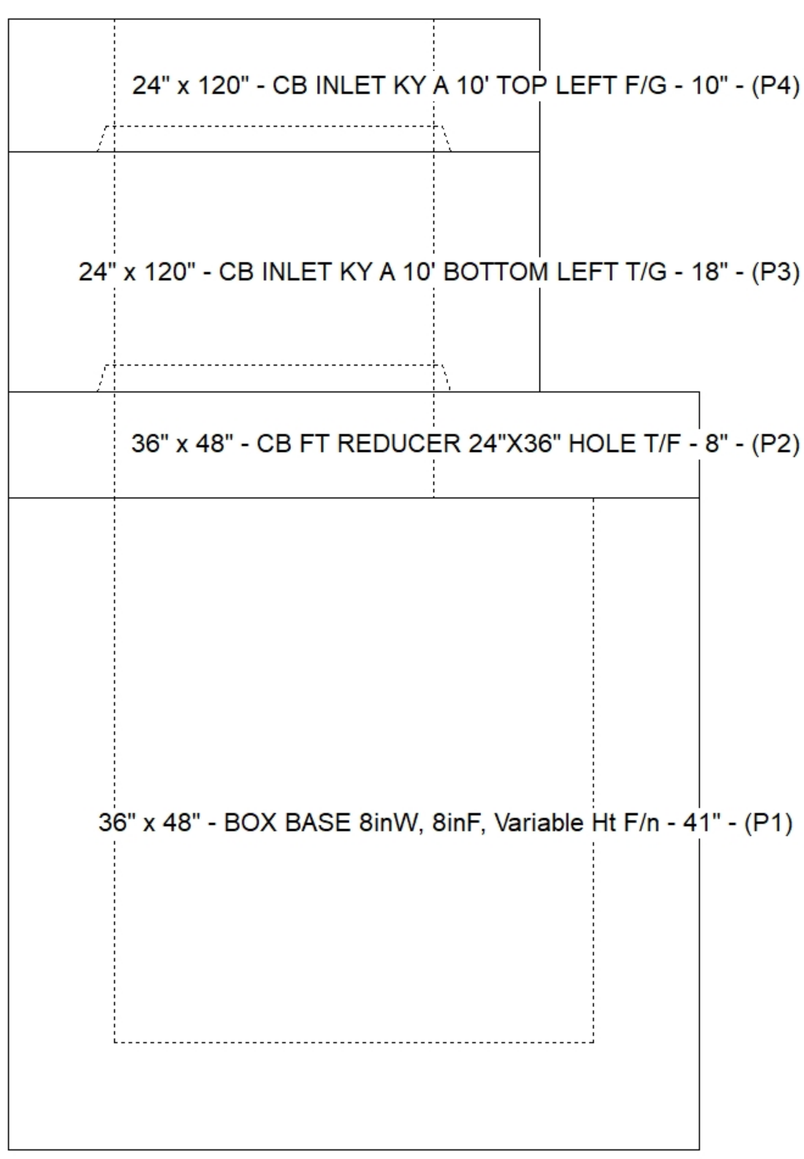

Default - Interior Dimensions

(P1)

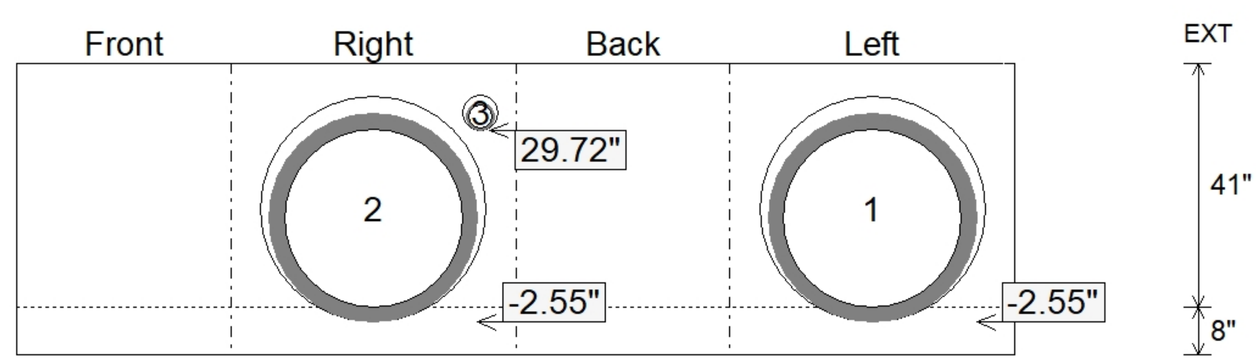

Submittal Drawing
7/30/2026 8:51:20 AM

SUBMITTAL
APPROVED BY: