Job Name: 24-4208 - KYTC Christian Co. Call 100 (ID 241018) Job Location: Hopkinsville, KY Contractor: Scotty's Contracting & Stone, LLC	Plant: Beaver Dam 7/30/2026 8:55:17 AM	Tech: J. Horsley PC: C. Goff	

Structure ID: 233 (425+00 LT)

P1 BX2436-08BVF **BOX BASE 8inW, 8inF, Variable Ht F/n**

P4) 24" x 120" - CB INLET KY A 10' TOP RIGHT F/G - 10"	3398 lb
P3) 24" x 120" - CB INLET KY A 10' BOTTOM RIGHT T/G - 18"	5270 lb
P2) 24" x 36" - FIELD ADJUSTMENT - 3"	0 lb
P1) 24" x 36" - BOX BASE 8inW, 8inF, Variable Ht F/n - 26"	3719 lb
1) CASTING - HOE KY-206 F/C (KY TY1)	206 lb
1) 24" x 36" - Conseal CS-102 1.00"	0 lb
1) Hole - 22	0 lb
1) Hole - 6	0 lb
Structure Total:	12593 lb

Structure Notes: .
** KYTC STATE PROJECT **
1. PER KYTC CBI TYPE A / ASTM C913 SPEC'S.
2. CONCRETE = 4,000 PSI AT 28 DAYS.
4. HOE KY-206 F/C CAST INTO TOP SLAB.
.
REINFORCING PER ASTM A615 (GRADE 60).
- TOP PHASE (As .62) #5 BARS AT 6" C.C.E.W.
- WALLS (As .31) #5 BARS AT 12" C.C.E.W.
- FLOOR (As .31) #5 BARS AT 12" C.C.E.W.

Rim: 547.43' Rim to Invert: 4.75' Slack: 0" Sump: 0" Step Position:

Position	Elev	Angle	Ext. (cw)	Pipe	Pipe OD	Connector	Hole	Horz Size	Up (_)	Offset
Invert 1	542.68'	235°	22.983"	15" RCP B WALL	19.5"	Hole 22	22"	26.857"	-2.25"	9"
Invert 2	543.91'	0°	20"	4" HDPE (perf pipe)	4.8"	Hole 6	6"	6"	14.36"	0"
Invert 3										
Invert 4										
Invert 5										
Invert 6										
Invert 7										
Invert 8										

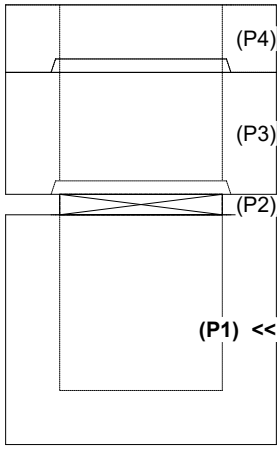

RIGHT-SIDE UP VIEW (int. dimensions)

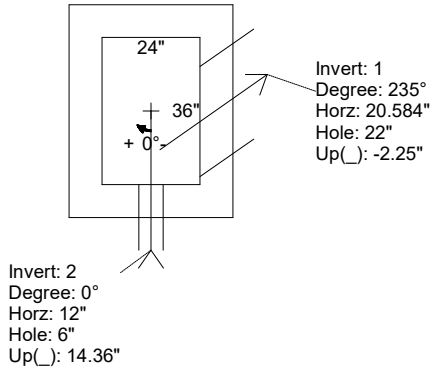

UPSIDE-DOWN VIEW (int. dimenions)

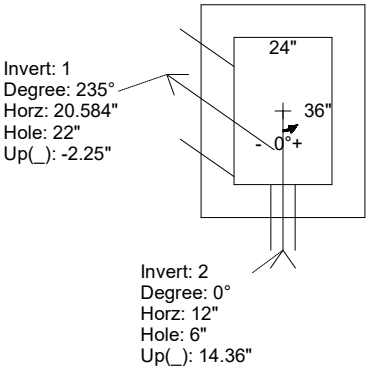

INSIDE WALL DIMENSIONS

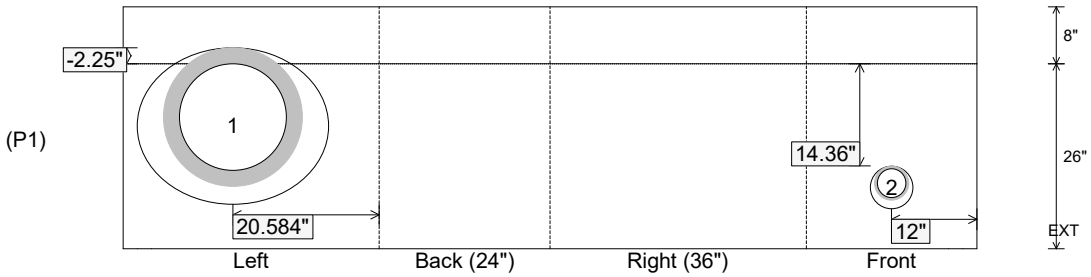

Coating (Int): Coating (Ext):	Seam Up: Flat Seam Dn: n/a	Wall Thickness: 8" Floor Height: 8"	Height (Int): 26" Height (Ext): 34"	Weight (Net): 3719 lb Volume (Net): 0.95cu.yd