Job Name: 24-4208 - KYTC Christian Co. Call 100 (ID 241018)
Job Location: Hopkinsville, KY
Contractor: Scotty's Contracting & Stone, LLC

PC: C. Goff
TECH: J. Horsley
Plant: Beaver Dam

Structure ID: **223**

Spec: KYTC	Rim: 552.73'	Sump: 0"	Floor (Bot): 546.483'
Type: CBI TYPE A (10') private	Invert: 547.15'	Floor (Top): 547.15'	Overall Height: 6.167'
Size: 36" x 36"	Rim to Invert: 5.58'	Floor Height: 8"	Slack: 0.96"

Structure Notes:
** KYTC STATE PROJECT **
STATION: 420+85 RT
1. PER KYTC CBI TYPE A / ASTM C-913 SPECS
2. CONCRETE: 4,000 PSI AT 28 DAYS
3. REINFORCEMENT:
   - TOP PHASE TOP: #5 BAR @ 6" C.C. E.W. (GRADE 60)
   - TOP PHASE BOTTOM: #5 BAR @ 12" C.C. E.W. (GRADE 60)
   - TRANSITION SLAB: DOUBLE MAT #5 BAR @ 6" C.C. E.W. (GRADE 60)
   - PIPE CHAMBER: #5 BAR @ 12" C.C. E.W. (GRADE 60)
4. HOE KY-206 FRAME & COVER "STORM" SUPPLIED BY ICAST - FRAME TO BE CAST INTO TOP PHASE TOP FLANGE SIDE UP

STRUCTURE SUMMARY:

P4) 24" x 120" - CB INLET KY A 10' TOP LEFT F/G - 10"	3400 lb
P3) 24" x 120" - CB INLET KY A 10' BOTTOM LEFT T/G - 18"	5270 lb
P2) 36" x 36" - CB TRANSITION SLAB 24"X36" HOLE T/F - 8"	1235 lb
P1) 36" x 36" - BOX BASE 8inW, 8inF F/n - 30"	3640 lb
1) CASTING - HOE KY-206 F/C (KY TY1)	206 lb
1) This Structure Includes a Cast-in Item - KY-206 Frame (Supplied by iCast)	0 lb
1) 36" x 36" - Conseal CS-102 1.00"	0 lb
1) 24" x 36" - Conseal CS-102 1.00"	0 lb
2) DOGHOUSE INVRTD - 30"x31.75"	0 lb
1) Hole - 20	0 lb
1) Hole - 22	0 lb
Structure Total:	13751 lb

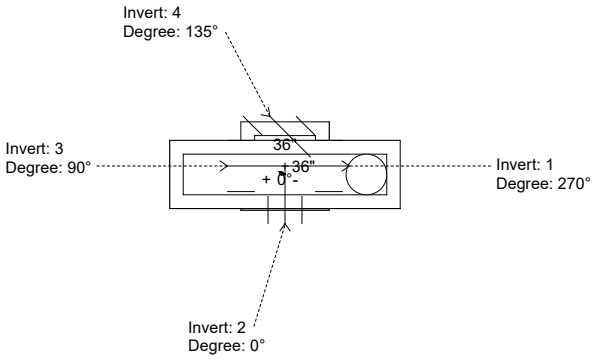

Position	Elev	Angle	Pipe	Pipe OD	Hole	Connector	Up (_)	Ref
Rim	552.73'							
Reducer	549.65'							
Invert 1	547.15'	270°	24" HDPE	27.8"	30" x 31.75"	DOGHOUSE INVRTD 30"x31.75"	-1.875"	P1
Invert 2	547.7'	0°	15" HDPE	17.6"	20"	Hole 20	5.25"	P1
Invert 3	547.15'	90°	24" HDPE	27.8"	30" x 31.75"	DOGHOUSE INVRTD 30"x31.75"	-1.875"	P1
Invert 4	547.61'	135°	15" RCP B WALL	19.5"	22"	Hole 22	3.25"	P1
Invert 5								
Invert 6								
Invert 7								
Invert 8								

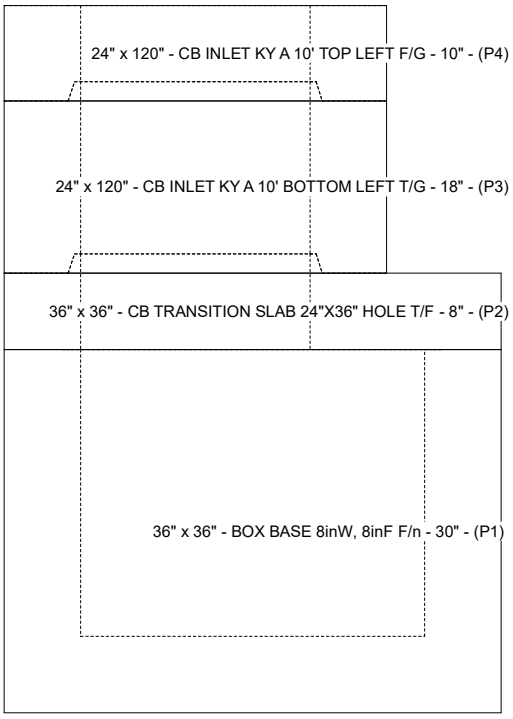

Cast (Int. Dim.) - Interior Dimensions

(P1)

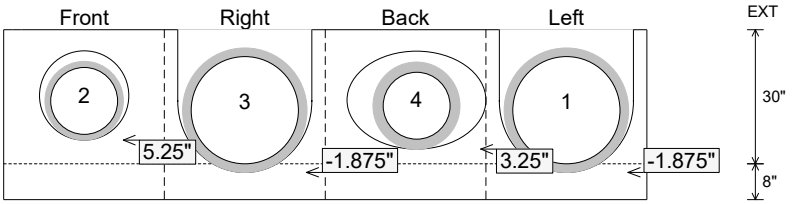

Submittal Drawing
6/26/2026 7:34:16 AM

SUBMITTAL
APPROVED BY: