Job Name: 24-4208 - KYTC Christian Co. Call 100 (ID 241018) Job Location: Hopkinsville, KY Contractor: Scotty's Contracting & Stone, LLC	Plant: Beaver Dam 6/26/2026 7:44:34 AM	Tech: J. Horsley PC: C. Goff	

Structure ID: 220

P2 BXLD3636FL-8T8WSP BX FLAT LID 8inW SPEC. (KY JB-B1) F/F

P3) 24" - CASTING (cast in) - 4"	0 lb
P2) 36" x 36" - BX FLAT LID 8inW SPEC. (KY JB-B1) F/F - 8"	1670 lb
P1) 36" x 36" - BOX BASE 8inW, 8inF, Variable Ht F/n - 55"	7153 lb
1) CASTING - HOE KY-460-11 F/G (DBI 11)	421 lb
1) This Structure Includes a Cast-in Item - KY-206 Frame (Supplied by iCast)	0 lb
1) 36" x 36" - Conseal CS-102 1.00"	0 lb
2) Hole - 30	0 lb
1) Hole - 20	0 lb
Structure Total:	9244 lb

Structure Notes:

** KYTC STATE PROJECT **

STATION: 419+31 RT

1. PER KYTC JB TYPE B / ASTM C-913 SPECS
2. CONCRETE: 4,000 PSI AT 28 DAYS
3. REINFORCEMENT: #5 BAR @ 6" C.C. E.W. (GRADE 60) - 2" MIN. REBAR CLEARANCE (TYP)
4. HOE KY-206 FRAME & COVER "STORM" SUPPLIED BY ICAST - FRAME TO BE CAST INTO FLAT LID FLANGE SIDE UP
5. LIFTERS: 4 EA. 5CA14 CONAC A-ANCHORS FOR PLANT & FIELD HANDLING - INSTALLED AS SHOWN
6. TOP SURFACE TO RECEIVE FLOATED FINISH

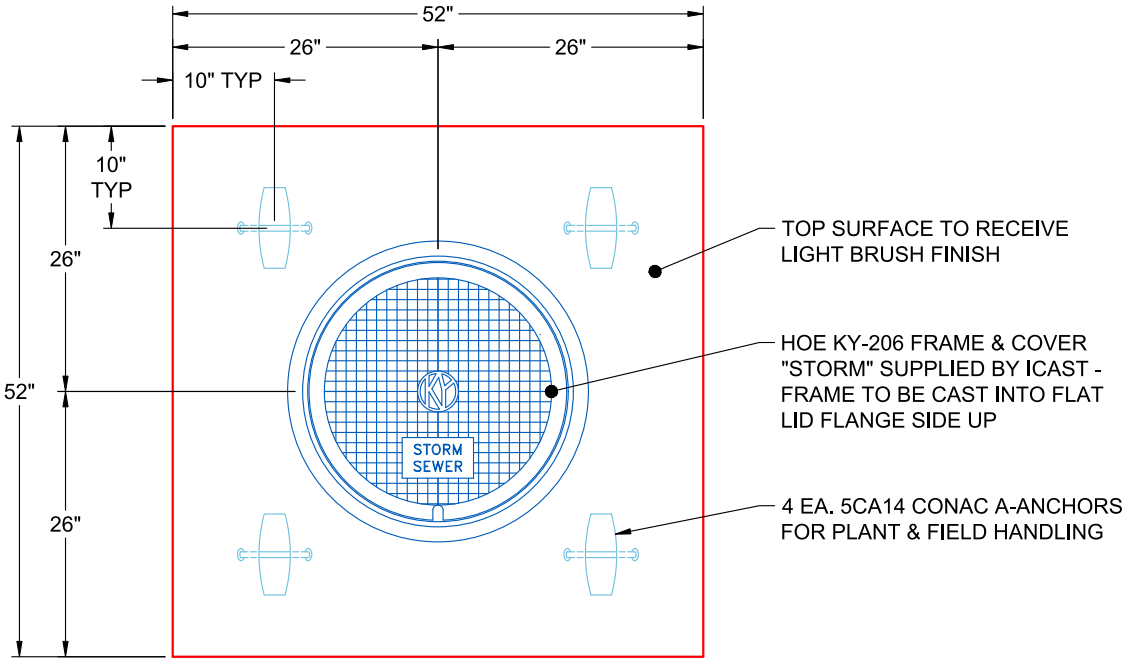

PLAN VIEW
(RIGHT SIDE UP)

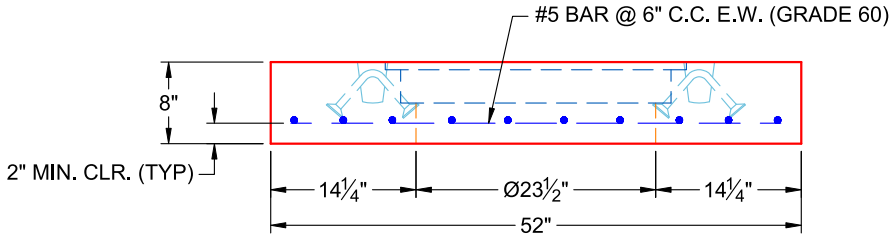

FRONT VIEW
(RIGHT SIDE UP)

Coating (Int): Coating (Ext):	Seam Up: Flat Seam Dn: Flat	Wall Thickness: 8"	Height (Ext): 8"	Weight (Net): 1670 lb Volume (Net): 0.43cu.yd

Job Number:
24-4208

Job Name:
KYTC Christian Co. Call 100
(241018)

Structure:
220

Note:
HOE KY-206 Frame Supplied By
iCast To Be Cast Into Flat Lid Flange
Side Up