Job Name: 24-4208 - KYTC Christian Co. Call 100 (ID 241018)
Job Location: Hopkinsville, KY
Contractor: Scotty's Contracting & Stone, LLC

PC: C. Goff
TECH: J. Horsley
Plant: Beaver Dam

Structure ID: **204**

Spec: KYTC	Rim: 565.12'	Sump: 0"	Floor (Bot): 561.703'
Type: DBI TYPE 13G private	Invert: 562.37'	Floor (Top): 562.37'	Overall Height: 3.417'
Size: 24" x 48"	Rim to Invert: 2.75'	Floor Height: 8"	Slack: 0"

Structure Notes:
** KYTC STATE PROJECT **
STATION: 410+35 LT
1. PER KYTC DBI TYPE 13G / ASTM C-913 SPECS
2. CONCRETE: 4,000 PSI AT 28 DAYS
3. REINFORCEMENT:
   - FLAT LID: DOUBLE MAT #5 BAR @ 6" C.C. E.W. (GRADE 60)
   - PIPE CHAMBER: #5 BAR @ 12" C.C. E.W. (GRADE 60)
4. HOE KY-230G FRAME & GRATE SUPPLIED BY ICAST - POURED IN PLACE BY OTHERS
5. STUB #5 BAR @ 12" C.C. E.W. (GRADE 60) 6" OUT TOP OF FLAT LID FOR FIELD POUR TIE-IN

STRUCTURE SUMMARY:

P3) 15" x 27" - P.I.P. - BY OTHERS - 8"	0 lb
P2) 24" x 48" - CB FLAT TOP 8"W w/15"x27" HOLE F/F - 8"	1447 lb
P1) 24" x 48" - BOX BASE 8inW, 8inF, Variable Ht F/n - 17"	3369 lb
1) CASTING - HOE KY-230-G F/G (GRADE)	237 lb
1) SECONDARY POUR	0 lb
1) 24" x 48" - Conseal CS-102 1.00"	0 lb
1) DOGHOUSE INVRTD - 20"x18.25"	0 lb
2) Hole - 4	0 lb
Structure Total:	5052 lb

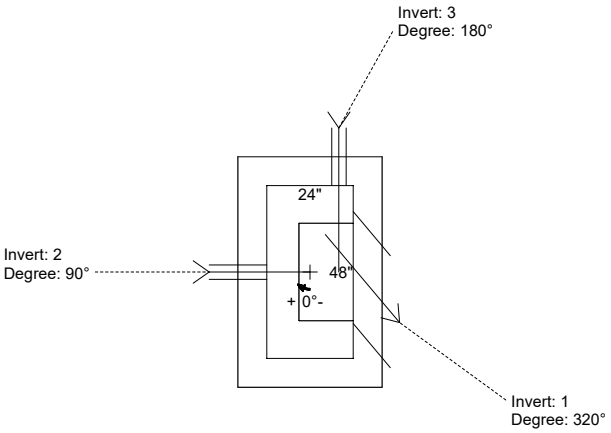

Position	Elev	Angle	Pipe	Pipe OD	Hole	Connector	Up (_)	Ref
Rim	565.12'							
Reducer								
Invert 1	562.37'	320°	15" HDPE	17.6"	20" x 18.25"	DOGHOUSE INVRTD 20"x18.25"	-1.25"	P1
Invert 2	563'	90°	4" WEEP HOLE	4"	4"	Hole 4	7.5"	P1
Invert 3	563'	180°	4" WEEP HOLE	4"	4"	Hole 4	7.5"	P1
Invert 4								
Invert 5								
Invert 6								
Invert 7								
Invert 8								

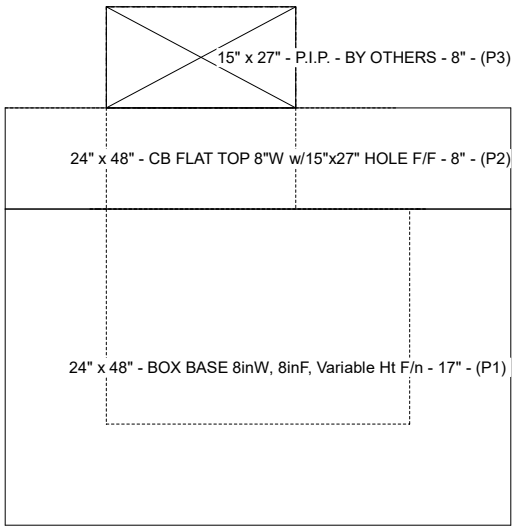

Cast (Int. Dim.) - Interior Dimensions

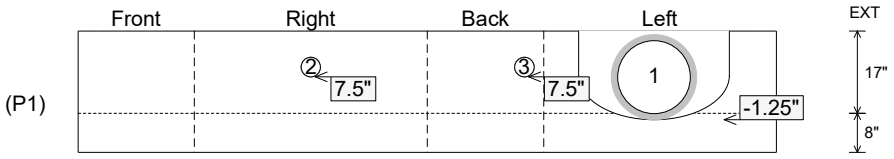

Submittal Drawing
6/26/2026 7:34:02 AM

SUBMITTAL
APPROVED BY: