Job Name: 24-4208 - KYTC Christian Co. Call 100 (ID 241018)
Job Location: Hopkinsville, KY
Contractor: Scotty's Contracting & Stone, LLC

PC: C. Goff
TECH: J. Horsley
Plant: Beaver Dam

Structure ID: **202**

Spec: KYTC	Rim: 565.84'	Sump: 0"	Floor (Bot): 560.093'
Type: CBI TYPE A (10') private	Invert: 560.76'	Floor (Top): 560.76'	Overall Height: 5.667'
Size: 24" x 36"	Rim to Invert: 5.08'	Floor Height: 8"	Slack: 0.96"

Structure Notes:
** KYTC STATE PROJECT **
STATION: 410+10 LT
1. PER KYTC CBI TYPE A / ASTM C-913 SPECS
2. CONCRETE: 4,000 PSI AT 28 DAYS
3. REINFORCEMENT:
   - TOP PHASE TOP: #5 BAR @ 6" C.C. E.W. (GRADE 60)
   - TOP PHASE BOTTOM: #5 BAR @ 12" C.C. E.W. (GRADE 60)
   - PIPE CHAMBER: #5 BAR @ 12" C.C. E.W. (GRADE 60)
4. HOE KY-206 FRAME & COVER "STORM" SUPPLIED BY ICAST - FRAME TO BE CAST INTO TOP PHASE TOP FLANGE SIDE UP

STRUCTURE SUMMARY:

P4) 24" x 120" - CB INLET KY A 10' TOP RIGHT F/G - 10"	3398 lb
P3) 24" x 120" - CB INLET KY A 10' BOTTOM RIGHT T/G - 18"	5270 lb
P2) 24" x 36" - FIELD ADJUSTMENT - 3"	0 lb
P1) 24" x 36" - BOX BASE 8inW, 8inF, Variable Ht F/n - 29"	3541 lb
1) CASTING - HOE KY-206 F/C (KY TY1)	206 lb
1) This Structure Includes a Cast-in Item - KY-206 Frame (Supplied by iCast)	0 lb
2) 24" x 36" - Conseal CS-102 1.00"	0 lb
1) Hole - 26	0 lb
2) Hole - 20	0 lb
1) Hole - 6	0 lb
Structure Total:	12415 lb

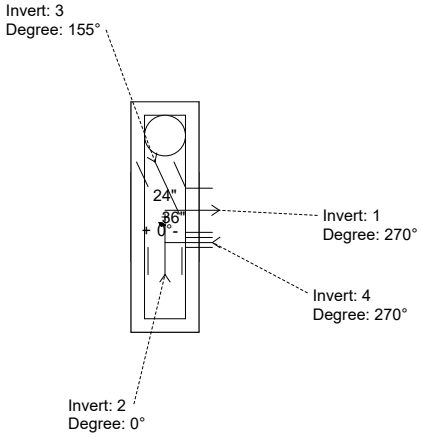

Position	Elev	Angle	Pipe	Pipe OD	Hole	Connector	Up (_)	Ref
Rim	565.84'							
Reducer								
Invert 1	560.76'	270°	18" RCP B WALL	23"	26"	Hole 26	-2.5"	P1
Invert 2	560.76'	0°	15" HDPE	17.6"	20"	Hole 20	-1.25"	P1
Invert 3	560.76'	155°	15" HDPE	17.6"	20"	Hole 20	-1.25"	P1
Invert 4	562.09'	270°	4" HDPE (perf pipe)	4.8"	6"	Hole 6	15.5"	P1
Invert 5								
Invert 6								
Invert 7								
Invert 8								

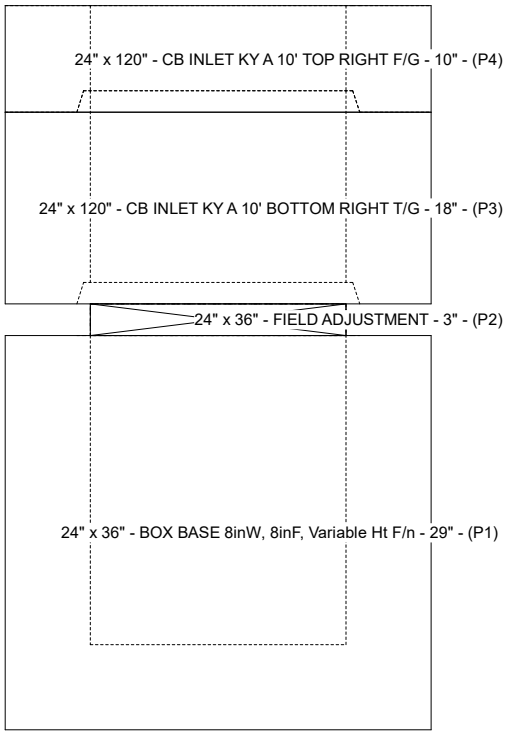

Cast (Int. Dim.) - Interior Dimensions

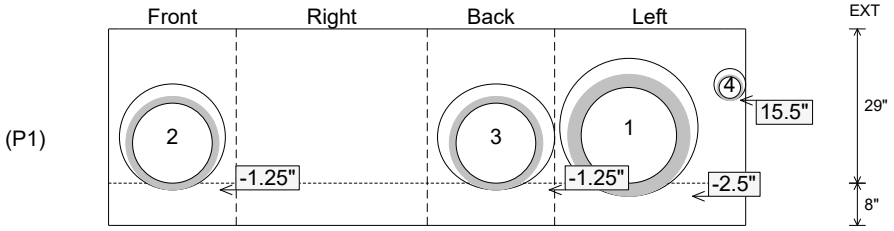

Submittal Drawing
6/26/2026 7:34:01 AM

SUBMITTAL
APPROVED BY: